POWER BIPOLAR TRANSISTORS

shortform catalog 2022 -2023

SSDI

SOLID STATE DEVICES, INC.

EST. 1967

JANS Certified

ISO 9001 & AS9100 Certified

www.ssdi-power.com

SOLID STATE DEVICES, INC.

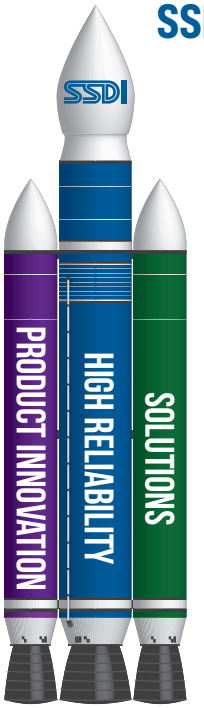

SSDI LIFTS PROGRAMS TO NEW HEIGHTS BY FOCUSING ON:

HIGH RELIABILITY

- 50+ years serving the HiRel market
- JANS certified
- ISO 9001 / AS9100 certified

PRODUCT INNOVATION

- **Developing innovative, state of the art products:** *pushing the envelope with performance not matched by other manufacturers' products*
- **Exploring new technology (e.g. GaN, SiC, etc.)**

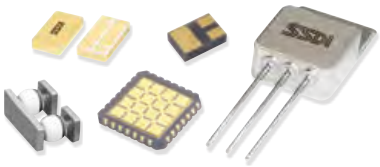

SOLUTIONS

- **Broad Capabilities:** *catalog showcases capability, not limited to current offerings*
- **Design Support / Flexibility:** *make adjustments to satisfy customer requirements*
- **Packaging Flexibility:** *improve density of board design which leads to overall system cost improvements*
- **Sustainment:** *support for the life of the program; work with customer to accommodate small to medium quantities*

SALES BY SECTOR

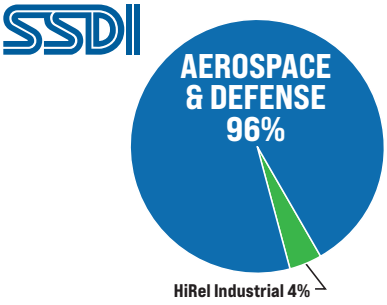

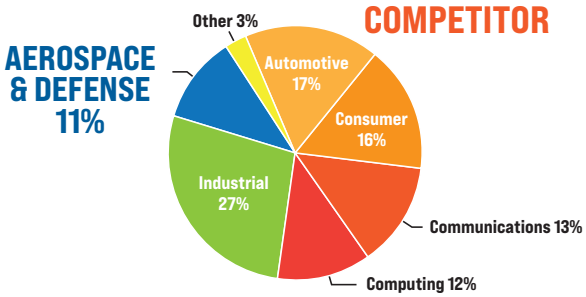

HIGH DENSITY
HIGH PERFORMANCE
3H
SSDI
SOLID STATE DEVICES, INC.
www.ssdi-power.com
HIGH RELIABILITY

WIDE RANGE OF HERMETIC PRODUCTS - MADE IN THE USA

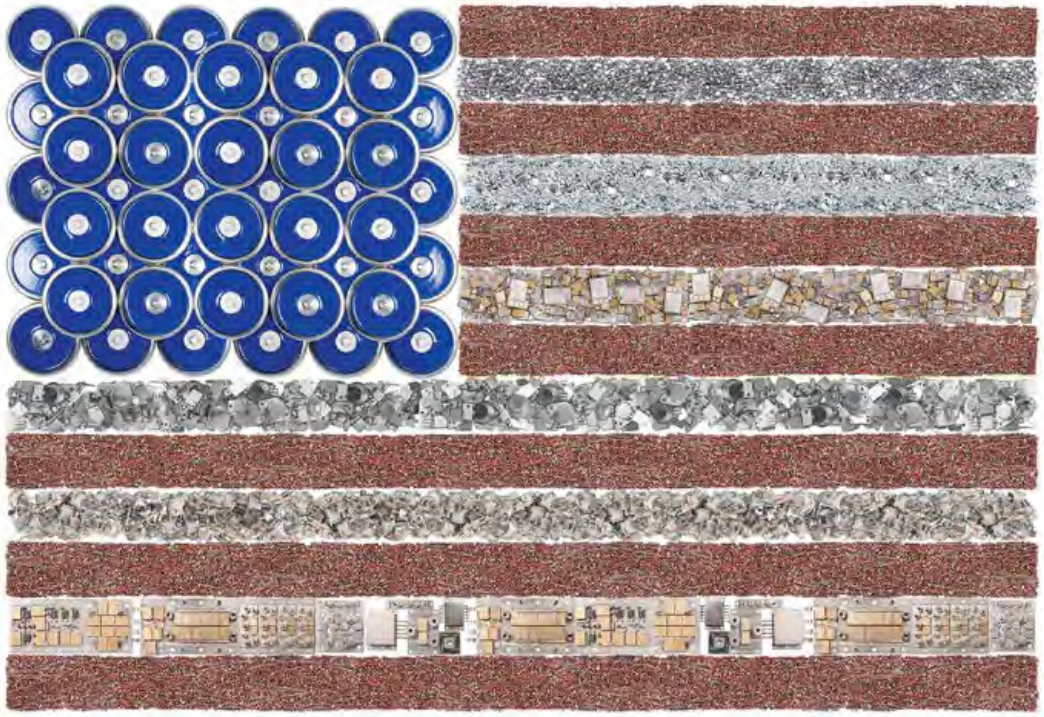

SILICON

- Rectifiers
- Schottkys
- Zeners
- TVS
- MOSFETs
- Bipolar Transistors
- JFETs
- PIN Diodes
- Thyristors
- IGBTs

SILICON CARBIDE (SiC)

- Schottkys
- MOSFETs

GALLIUM NITRIDE (GaN)

- Power FETs

ASSEMBLY PRODUCTS

- LDO
- DC-DC Converters
- Hybrids
- Assemblies
- Power Modules

Notes: Minimum order may apply.
Most products available in die form.

TABLE OF CONTENTS

POWER TRANSISTORS

SSDI has supplied high reliability bipolar transistors to the Aerospace and Defense industries for over 50 years. SSDI's capabilities extend far beyond this list of products:

- All devices in standard JEDEC packages are also available in surface mount package options
- SSDI can meet the requirements for most 2N... products offered by Texas Instruments, Motorola, Microsemi, etc.
- Contact factory if a suitable part number is not listed in this catalog

- 1 Amp NPN 4
- 1.5 Amp NPN 5
- 1 Amp PNP 6
- 1.5 Amp PNP 7
- 2 Amp NPN 8
- 2.5 Amp NPN 9
- 2 Amp PNP 10
- 3 - 3.5 Amp NPN 11
- 3 - 3.5 Amp PNP 12
- 4 Amp NPN 13
- 4 Amp PNP 14
- 5 Amp NPN 15
- 5 Amp PNP 18
- 6 Amp NPN 20
- 6 Amp PNP 20
- 7 - 7.5 Amp NPN 21
- 7 Amp PNP 22
- 8 Amp NPN 22
- 8 Amp PNP 22
- 10 Amp NPN 23
- 10 Amp PNP 26
- 12 Amp NPN 27
- 12 Amp PNP 27
- 15 Amp NPN 28
- 15 Amp PNP 29
- 16 Amp NPN 29
- 16 Amp PNP 29
- 20 Amp NPN 30
- 20 Amp PNP 31
- 25 Amp NPN 31
- 25 Amp PNP 32
- 30 Amp NPN 32
- 30 Amp PNP 33
- 40 Amp NPN 34
- 40 Amp PNP 34
- 50 Amp NPN 34
- 50 Amp PNP 35
- 80 Amp NPN 35
- 90 Amp NPN 36
- 100 - 200 Amp NPN 36
- Gullwing 37
- Part Number Index 39
- Case Outlines 44
- High Reliability Screening 50
- SSDI's Vital Role in Supplying HiRel Products 51
- Sales Reps ..... back cover

Note: TX, TXV, and S-level screening available for all devices. Screening based on MIL-PRF-19500. Screening flows available on request.

The information in this book has been carefully checked and is believed to be accurate; however, no responsibility is assumed for errors or omissions.

Solid State Devices, Inc. reserves the right to make changes without further notice to any product herein. Solid State Devices, Inc. does not assume liability arising out of the application or use of any product or circuit described herein; neither does it convey any license under its patent rights nor the rights of others.

Solid State Devices, Inc.® and SSDI® are registered trademarks of Solid State Devices, Inc. Solid State Devices, Inc. is an Equal Opportunity/Affirmative Action Employer.

Warnings

Due to technical requirements, components may contain dangerous substances. For information on the types in question, please contact SSDI.

SSDI components may be used in life-support devices or systems only with the express written approval of SSDI. Failure of such components can be reasonably expected to cause the failure of that life-support device or system, or to affect the safety or effectiveness of that device or system. Life support devices or systems are intentionally implanted in a human body, or used to support and/or maintain and/or protect human life. If they fail, it is reasonable to assume that the health of the user or other persons may be endangered.

Power Transistors 3.00 (05/26/21) - Entire contents copyright © 2021 Solid State Devices, Inc. All Rights Reserved.
No part of this catalog may be reproduced, transmitted, rewritten, scanned, stored mechanically or electronically, translated into other languages, or adapted for any use without the express written permission of Solid State Devices, Inc.

1 AMP NPN

Sorted by I_C, then V_{CEO}

Ratings based on 25°C case temperature unless otherwise specified

Part Number	I_C max (A)	V_{CEO} max (V)	h_{FE} min	h_{FE} max	@ I_C (A)	$V_{CE(sat)}$ max (V)	@ I_C (A)	f_T min (MHz)	P_T max *T_C=100°C (W)	Package
2N1700	1	40	20	80	*Note 1*	1	*Note 1*	*Note 1*	5	TO-5
2N4910	1	40	20	100	0.5	0.6	1	3	25	TO-66
2N4237	1	40	30	150	0.25	0.6	1	1	5	TO-5
2N4238	1	60	30	150	0.25	0.6	1	1	5	TO-5
2N4239	1	80	30	150	0.25	0.6	1	1	5	TO-5
2N1714	1	60	20	60	0.2	2	0.2	*Note 1*	10	TO-5
2N1716	1	60	40	120	0.2	2	0.2	*Note 1*	10	TO-5
2N4911	1	60	20	100	0.5	0.6	1	3	25	TO-66
2N2102	1	65	40	120	*Note 1*	0.5	*Note 1*	*Note 1*	5	TO-5
2N2987	1	80	25	75	0.2	0.8	0.2	30	15*	TO-5
2N2989	1	80	60	120	0.2	0.8	0.2	30	15*	TO-5
2N2991	1	80	25	75	0.2	0.8	0.2	30	15*	TO-5
2N2993	1	80	60	120	0.2	0.8	0.2	30	15*	TO-5
2N3019	1	80	50	300	0.5	0.2	0.15	*Note 1*	0.8	TO-5
2N3057A	1	80	50	300	0.5	0.2	0.15	*Note 1*	0.5	TO-46
2N3700	1	80	50	300	0.5	0.2	0.15	*Note 1*	0.5	TO-18
2N3665	1	80	40	120	0.15	1.2	0.5	60	5	TO-5
2N3666	1	80	100	300	0.15	1.2	0.5	60	5	TO-5
2N4000	1	80	30	120	0.5	0.5	1	40	15*	TO-5
2N4912	1	80	20	100	0.5	0.6	1	3	25	TO-66
SFT3019	1	80	100	300	0.15	0.5	0.5	*Note 1*	5	LCC4; TO-18
2N2988	1	100	25	75	0.2	0.8	0.2	30	15*	TO-5
2N2990	1	100	60	120	0.2	0.8	0.2	30	15*	TO-5
2N2992	1	100	25	75	0.2	0.8	0.2	30	15*	TO-5
2N2994	1	100	60	120	0.2	0.8	0.2	30	15*	TO-5
2N4001	1	100	40	120	0.5	0.5	1	40	15*	TO-5
2N5681	1	100	40	150	0.25	0.6	0.25	*Note 1*	10	TO-5
2N5682	1	120	40	150	0.25	0.6	0.25	*Note 1*	10	TO-5
2N3583	1	175	40	200	0.5	5	0.1	*Note 1*	35	TO-66
2N3738	1	225	40	200	*Note 1*	2.5	*Note 1*	*Note 1*	20	TO-66
2N3439	1	350	40	160	0.02	0.5	0.05	*Note 1*	5	TO-39
2N3440	1	250	40	160	0.02	0.5	0.05	*Note 1*	5	TO-39
2N3739	1	300	40	200	0.1	2.5	0.25	*Note 1*	20	TO-66
2N5252	1	300	40	100	*Note 1*	1	*Note 1*	*Note 1*	1	TO-5
SFT3439S.22	1	350	40	160	0.02	0.5	0.05	*Note 1*	5	SMD.22
SPT5502	1	350	5	65	1	1	1	35	6	TO-5

Note 1: Contact factory for values and more information.

Sorted by I_C, then V_{CEO}

Ratings based on 25°C case temperature unless otherwise specified

Part Number	I_C max (A)	V_{CEO} max (V)	h_{FE} min	h_{FE} max	@ I_C (A)	$V_{CE(sat)}$ max (V)	@ I_C (A)	f_T min (MHz)	P_T max *T_C=100°C (W)	Package
2N5092	1	400	50	300	*Note 1*	0.5	*Note 1*	*Note 1*	4	TO-5
SFT5095	1	400	15	250	0.1	0.5	0.025	25	2	LCC4, TO-5, Cerpack, SMD.22
SFT8600/4	1	400	15	200	0.25	0.5	0.1	8	1	LCC4
SFT8600/5	1	400	40	200	0.01	0.5	0.1	8	3.3	TO-5
SFT8600S.22	1	400	40	200	0.01	0.5	0.1	8	8.3	SMD.22
SFT8600G	1	400	40	200	0.01	0.5	0.1	8	25	Cerpack
SFT8600S.5	1	400	40	200	0.01	0.5	0.1	8	25	SMD.5
SPT5503	1	400	5	65	1	1	1	35	6	TO-5
SFT5097	1	450	15	250	0.1	0.5	0.025	25	2	LCC4, TO-5, Cerpack, SMD.22
SFT698	1	450	*Note 1*	120	0.2	0.5	0.05	*Note 1*	5	SMD.22, TO-5, TO-39
STX7905	1	450	40	200	1	0.5	0.025	25	20	TO-59 (3 Pins)
2N5095	1	500	50	300	*Note 1*	0.5	*Note 1*	*Note 1*	4	TO-5
2N5097	1	600	50	300	*Note 1*	0.5	*Note 1*	*Note 1*	4	TO-5
2N5098	1	700	50	300	*Note 1*	0.5	*Note 1*	*Note 1*	4	TO-5
2N5099	1	800	50	300	*Note 1*	0.5	*Note 1*	*Note 1*	4	TO-5
2N1479	1.5	40	20	60	0.2	0.75	0.2	*Note 1*	1	TO-5
2N1481	1.5	40	20	60	0.2	0.75	0.2	*Note 1*	1	TO-5
2N1480	1.5	55	20	60	0.2	0.75	0.2	*Note 1*	1	TO-5
2N1482	1.5	55	20	60	0.2	0.75	0.2	*Note 1*	1	TO-5
SFT4373S.22	1.5	80	35	*Note 1*	2	0.25	1	80	6.6*	SMD.22

Note 1: Contact factory for values and more information.

Hermetic Packaging

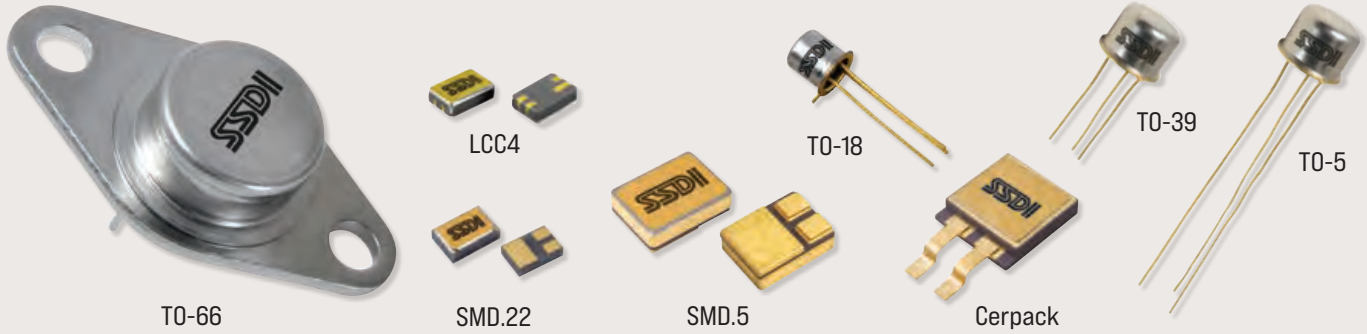

1 AMP PNP

Sorted by I_C, then V_{CEO}

Ratings based on 25°C case temperature unless otherwise specified

Part Number	I_C max (A)	V_{CEO} max (V)	h_{FE} min	h_{FE} max	@ I_C (A)	$V_{CE(sat)}$ max (V)	@ I_C (A)	f_T min (MHz)	P_T max *T_C=100°C (W)	Package
2N3660	1	30	25	100	0.5	1.2	0.5	25	5*	TO-5
2N3467	1	40	40	120	0.5	0.6	0.5	175	1	TO-39; TO-5
2N3774	1	40	20	60	0.2	0.2	0.2	1	5*	TO-5
2N3778	1	40	10	40	0.2	0.2	0.2	1	5*	TO-5
2N4234	1	40	30	150	0.25	0.6	1	3	6	TO-5
2N4898	1	40	20	100	0.5	0.6	1	4	25	TO-66
2N3245	1	50	30	90	*Note 1*	0.6	*Note 1*	*Note 1*	5	TO-5
2N3468	1	50	25	75	0.5	0.6	0.5	150	1	TO-39; TO-5
2N3661	1	50	25	100	0.5	1.2	0.5	25	10	TO-5
2N3775	1	60	20	60	0.2	0.2	0.2	1	5*	TO-5
2N3779	1	60	10	40	0.2	0.2	0.2	1	5*	TO-5
2N4235	1	60	30	150	0.25	0.6	1	3	6	TO-5
2N4899	1	60	20	100	0.5	0.6	1	4	25	TO-66
2N3776	1	80	20	60	0.2	0.2	0.2	1	5*	TO-5
2N3780	1	80	10	40	0.2	0.2	0.2	1	5*	TO-5
2N4029	1	80	100	300	0.1	0.15	0.15	*Note 1*	0.5	TO-18; TO-39
2N4033	1	80	100	300	0.1	0.15	0.15	*Note 1*	0.8	TO-18; TO-39
2N4236	1	80	30	150	0.25	0.6	1	3	6	TO-5
2N4900	1	80	20	100	0.5	0.6	1	4	25	TO-66
2N3777	1	100	20	60	0.2	0.2	0.2	1	5*	TO-5
2N3781	1	100	10	40	0.2	0.2	0.2	1	5*	TO-5
2N5679	1	100	40	150	0.25	0.6	0.25	*Note 1*	10	TO-39
2N5680	1	120	40	150	0.25	0.6	0.25	*Note 1*	10	TO-39
2N3634	1	140	50	150	0.05	0.6	0.05	*Note 1*	1	TO-39; TO-5
2N3637	1	175	100	300	0.05	0.6	0.05	*Note 1*	1	TO-39; TO-5
2N6420	1	175	40	200	*Note 1*	5	*Note 1*	*Note 1*	35	TO-66
2N5415	1	200	30	120	0.05	2	0.05	15	10	TO-5
2N6424	1	225	40	200	*Note 1*	2.5	*Note 1*	*Note 1*	20	TO-66
2N5416	1	300	30	120	0.05	2	0.05	15	10	TO-5
2N6425	1	300	40	200	*Note 1*	2.5	*Note 1*	*Note 1*	20	TO-66
2N5091	1	350	40	250	*Note 1*	3	*Note 1*	*Note 1*	4	TO-5
SFT5094/5	1	350	40	300	0.025	0.5	0.025	25	5.8	TO-5
SFT5094-4	1	350	40	300	0.025	0.5	0.025	25	1	LCC4
SFT5094G	1	350	40	300	0.025	0.5	0.025	25	19.4	Cerpack
SFT5094S.22	1	350	40	300	0.025	0.5	0.025	25	19.4	SMD.22 / C
SFT5094S.5	1	350	40	300	0.025	0.5	0.025	25	35	SMD.5
2N5093	1	400	40	250	*Note 1*	3	*Note 1*	*Note 1*	4	TO-5
SFT5096/5	1	400	40	300	0.025	0.5	0.025	25	5.8	TO-5

Note 1: Contact factory for values and more information.

Sorted by I_C, then V_{CEO}

Ratings based on 25°C case temperature unless otherwise specified

Part Number	I_C max (A)	V_{CEO} max (V)	h_{FE} min	h_{FE} max	@ I_C (A)	$V_{CE(sat)}$ max (V)	@ I_C (A)	f_T min (MHz)	P_T max *T_C=100°C (W)	Package
SFT5096-4	1	400	40	300	0.025	0.5	0.025	25	1	LCC4
SFT5096G	1	400	40	300	0.025	0.5	0.025	25	19.4	Cerpack
SFT5096S.22	1	400	40	300	0.025	0.5	0.025	25	19.4	SMD.22 / C
SFT5096S.5	1	400	40	300	0.025	0.5	0.025	25	35	SMD.5
SFX5096/5	1	400	40	300	0.025	0.5	0.025	40	1	TO-5
2N5094	1	450	40	250	*Note 1*	3	*Note 1*	*Note 1*	4	TO-5
SFTN5096	1	450	70	200	0.5	0.1	0.025	25	1	LCC4; TO-5, Cerpack, SMD.22
STX6905	1	450	40	200	0.025	0.5	0.025	20	20	TO-59 (3 Pins)
2N5096	1	500	40	250	*Note 1*	3	*Note 1*	*Note 1*	4	TO-5
SFT5096A/5	1	550	150	300	0.025	0.1	0.025	40	5.8	TO-5
SFT5096A-4	1	550	150	300	0.025	0.1	0.025	40	1	LCC4
SFT5096AG	1	550	150	300	0.025	0.1	0.025	40	19.4	Cerpack
SFT5096AS.22	1	550	150	300	0.025	0.1	0.025	40	19.4	SMD.22 / C
SFT5096AS.5	1	550	150	300	0.025	0.1	0.025	40	35	SMD.5
2N3762	1.5	40	40	140	0.5	0.5	0.5	*Note 1*	1	TO-39; TO-5; TO-46
2N3763	1.5	60	40	140	0.5	0.5	0.5	*Note 1*	1	TO-39; TO-5; TO-46
SFT4374	1.5	80	75	*Note 1*	2	1	2.4	120	6.6	SMD.22

Note 1: Contact factory for values and more information.

Hermetic Packaging

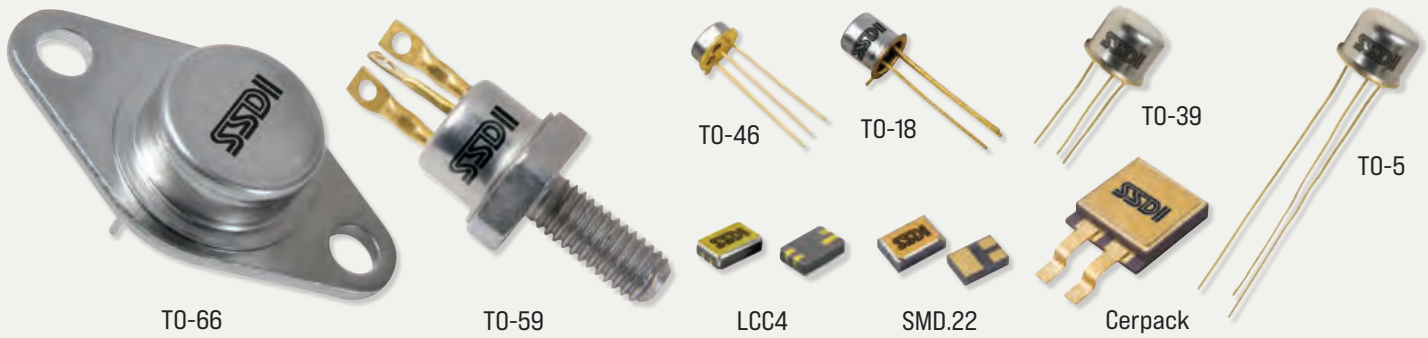

2 AMP NPN

Sorted by I_C, then V_{CEO}

Ratings based on 25°C case temperature unless otherwise specified

Part Number	I_C max (A)	V_{CEO} max (V)	h_{FE} min	h_{FE} max	@ I_C (A)	$V_{CE(sat)}$ max (V)	@ I_C (A)	f_T min (MHz)	P_T max *T_C=100°C (W)	Package
2N3917	2	40	30	120	1	1.2	1	50	20	TO-3
2N3918	2	40	100	300	1	1.2	1	50	20	TO-3
2N5321	2	50	40	250	*Note 1*	0.8	*Note 1*	*Note 1*	10	TO-5
2N5598	2	60	70	200	1	0.85	2	60	20	TO-66
2N5320	2	75	30	130	*Note 1*	0.5	*Note 1*	*Note 1*	10	TO-5
2N2890	2	80	30	90	*Note 1*	0.75	*Note 1*	*Note 1*	5	TO-5
2N2891	2	80	50	150	*Note 1*	0.75	*Note 1*	*Note 1*	5	TO-5
2N4300	2	80	30	120	1	0.5	0.2	30	15*	TO-5
2N4300	2	80	30	120	Note 1	0.5	*Note 1*	*Note 1*	26	TO-5
2N4998	2	80	30	90	1	0.46	1	50	35	TO-59
2N5000	2	80	70	200	1	0.46	1	50	35	TO-59
2N5148	2	80	30	90	1	0.85	2	50	7	TO-39
2N5150	2	80	70	200	1	0.85	2	60	7	TO-39
2N5152, 2N5152L	2	80	30	90	2.5	1.5	5	*Note 1*	10	TO-5; TO-39; U3
2N5154, 2N5154L	2	80	70	200	2.5	1.5	5	*Note 1*	10	TO-5; TO-39; U3
2N5600	2	80	30	90	1	0.85	2	50	20	TO-66
2N5602	2	80	70	200	1	0.85	2	60	20	TO-66
2N6215	2	80	25	150	*Note 1*	0.8	*Note 1*	*Note 1*	35	TO-63
SFT4300	2	80	50	200	1	0.3	1	80	6.6	TO-5
SFT4300A	2	80	50	200	1	0.3	1	80	15	TO-5, SMD.22
SFT4300S.22	2	80	50	200	1	0.3	1	80	15	SMD.22
2N2150	2	100	20	60	1	1	1	*Note 1*	30*	TO-111
2N2151	2	100	40	120	1	1	1	*Note 1*	30*	TO-111
2N5604	2	100	30	90	1	0.85	2	50	20	TO-66
2N4862	2	120	50	150	0.5	0.2	0.5	50	4*	TO-46
2N4863	2	120	50	150	0.5	0.2	0.5	50	4*	TO-5
2N4864	2	120	50	150	0.5	0.2	0.5	50	16*	TO-66
2N5050	2	125	25	100	*Note 1*	1	*Note 1*	*Note 1*	40	TO-66
2N5051	2	150	25	100	*Note 1*	1	*Note 1*	*Note 1*	40	TO-66
2N5052	2	200	25	100	*Note 1*	1	*Note 1*	*Note 1*	40	TO-66
2N5660	2	200	40	120	0.5	0.4	1	*Note 1*	20*	TO-5, TO-66
2N5662	2	200	40	120	0.5	0.4	1	*Note 1*	15*	TO-5, TO-66
2N5661	2	300	25	75	0.5	0.4	1	20	20*	TO-5, TO-66
2N5663	2	300	25	75	0.5	0.4	1	20	15*	TO-5, TO-66
2N3788	2	325	20	180	0.5	1	1.5	0.05	100	TO-3
SFT6800	2	400	15	*Note 1*	1	0.5	0.5	25	6.67	TO-5
SFT6800/59	2	400	15	Note 1	1	0.5	0.5	25	20	TO-59 (3 Pins)
SFT6800S.5	2	400	15	Note 1	1	0.5	0.5	25	15	SMD.5

Note 1: Contact factory for values and more information.

2.5 AMP NPN

Sorted by I_C, then V_{CEO}

Ratings based on 25°C case temperature unless otherwise specified

Part Number	I_C max (A)	V_{CEO} max (V)	h_{FE} min	h_{FE} max	@ I_C (A)	$V_{CE(sat)}$ max (V)	@ I_C (A)	f_T min (MHz)	P_T max *T_C=100°C (W)	Package
2N1701	2.5	40	20	80	*Note 1*	1.5	*Note 1*	*Note 1*	25	TO-8
2N3619	2.5	40	40	*Note 1*	*Note 1*	0.75	*Note 1*	*Note 1*	7.5	TO-5
2N3620	2.5	40	3	*Note 1*	*Note 1*	1	*Note 1*	*Note 1*	7.5	TO-5
2N3627	2.5	50	40	*Note 1*	*Note 1*	0.75	*Note 1*	*Note 1*	7.5	TO-5
2N2876	2.5	60	30	150	0.3	1	2.5	150	17.5	TO-60

Note 1: Contact factory for values and more information.

Hermetic Packaging

2 AMP PNP

Sorted by I_C, then V_{CEO}

Ratings based on 25°C case temperature unless otherwise specified

Part Number	I_C max (A)	V_{CEO} max (V)	h_{FE} min	h_{FE} max	@ I_C (A)	$V_{CE(sat)}$ max (V)	@ I_C (A)	f_T min (MHz)	P_T max *T_C=100°C (W)	Package
2N3205	2	40	20	60	*Note 1*	0.4	*Note 1*	*Note 1*	40	TO-59
2N3208	2	40	20	60	*Note 1*	0.4	*Note 1*	*Note 1*	8	TO-5
2N4387	2	40	25	100	0.5	3	1	25	20	TO-66
2N5323	2	50	40	250	*Note 1*	1.2	*Note 1*	*Note 1*	10	TO-5
2N3206	2	60	20	60	*Note 1*	0.4	*Note 1*	*Note 1*	40	TO-59
2N4388	2	60	25	100	0.5	3	1	25	20	TO-66
2N5597	2	60	70	200	1	0.85	2	35**	20	TO-66
SFT4407S.22	2	60	20	80	1	0.5	0.5	100	5.5	SMD.22
SFT5333	2	70	85	*Note 1*	1	0.45	1	85	6.6	TO-5
SFT5333A	2	70	40	250	1	0.45	1	85	15	TO-5
SFT5333S.22	2	70	40	250	1	0.45	1	85	15	SMD.22
2N5322	2	75	30	130	*Note 1*	0.5	*Note 1*	*Note 1*	10	TO-5
2N4999	2	80	30	90	1	0.46	1	30**	35	TO-59
2N5001	2	80	70	200	1	0.46	1	35**	35	TO-59
2N5147	2	80	30	90	1	0.85	2	30**	7	TO-39
2N5149	2	80	70	200	1	0.85	2	35**	7	TO-39
2N5151	2	80	30	90	2.5	1.5	5	*Note 1*	10	TO-39
2N5153	2	80	70	200	2.5	1.5	5	*Note 1*	10	TO-39
2N5333	2	80	30	120	1	1	2	30	15*	TO-5
2N5599	2	80	30	90	*Note 1*	0.85	*Note 1*	*Note 1*	20	TO-66
2N5601	2	80	70	200	*Note 1*	0.85	*Note 1*	*Note 1*	20	TO-66
2N3207	2	100	20	60	*Note 1*	0.4	*Note 1*	*Note 1*	40	TO-59
2N5603	2	100	30	90	*Note 1*	0.85	*Note 1*	*Note 1*	20	TO-66
2N6211	2	225	30	175	1	1.4	1	*Note 1*	35	TO-66
2N6421	2	250	8	80	*Note 1*	0.75	*Note 1*	*Note 1*	35	TO-66
2N6212	2	300	30	175	1	1.6	1	*Note 1*	35	TO-66
2N6422	2	300	8	80	*Note 1*	0.75	*Note 1*	*Note 1*	35	TO-66
2N6423	2	300	10	100	*Note 1*	1	*Note 1*	*Note 1*	35	TO-66
2N6213	2	350	30	175	1	2	1	*Note 1*	35	TO-66
2N6214	2	400	10	100	*Note 1*	0.5	*Note 1*	*Note 1*	35	TO-66
SFT1192	2	400	80	*Note 1*	1	1	0.5	50	6	TO-5
SFT1192/59	2	400	40	*Note 1*	0.5	2	0.5	50	20	TO-59 (3 Pins)
SFT1192S.5	2	400	40	*Note 1*	0.5	1	0.5	50	5	SMD.5
SFX1192	2	400	40	*Note 1*	0.5	1	0.5	50	6	TO-5

Note 1: Contact factory for values and more information.

Hermetic Packaging

3 - 3.5 AMP NPN

Sorted by I_C, then V_{CEO}

Ratings based on 25°C case temperature unless otherwise specified

Part Number	I_C max (A)	V_{CEO} max (V)	h_{FE} min	h_{FE} max	@ I_C (A)	$V_{CE(sat)}$ max (V)	@ I_C (A)	f_T min (MHz)	P_T max *T_C=100°C (W)	Package
2N1483	3	40	20	60	0.75	1.2	5	*Note 1*	25	TO-8
2N1485	3	40	35	100	0.75	0.75	5	*Note 1*	25	TO-8
2N3506	3	40	40	120	1.5	1	1.5	*Note 1*	5	TO-5
2N3928	3	40	40	150	*Note 1*	0.5	*Note 1*	*Note 1*	7.5	TO-5
2N3929	3	40	40	150	*Note 1*	0.5	*Note 1*	*Note 1*	35	TO-63
2N4225	3	40	40	150	*Note 1*	0.5	*Note 1*	*Note 1*	5	TO-5
2N4231	3	40	25	100	1.5	0.7	1.5	4	35	TO-66
2N3507	3	50	30	150	1.5	1	1.5	*Note 1*	5	TO-5
2N3878	3	50	50	200	0.5	2	4	40	35	TO-66
2N1484	3	55	20	60	0.75	1.2	5	*Note 1*	25	TO-8
2N1486	3	55	35	100	0.75	0.75	5	*Note 1*	25	TO-8
2N3675	3	55	12	60	1	0.8	1	1	8.7	TO-5
2N3418	3	60	20	60	1	0.25	1	*Note 1*	1	TO-5
2N3420	3	60	40	120	1	0.25	1	*Note 1*	1	TO-5
2N4232	3	60	25	100	1.5	0.7	1.5	4	35	TO-66
2N5334	3	60	30	150	*Note 1*	0.7	*Note 1*	*Note 1*	6	TO-5
2N2983	3	80	20	60	1	0.6	1	18	15*	TO-5
2N2985	3	80	40	120	1	0.6	1	18	15*	TO-5
2N3419	3	80	20	60	1	0.25	1	*Note 1*	1	TO-5
2N3421	3	80	40	120	1	0.25	1	*Note 1*	1	TO-5
2N4233	3	80	25	100	1.5	0.7	1.5	4	35	TO-66
2N3676	3	90	12	60	1	0.8	1	1	8.7	TO-5
2N2984	3	120	20	60	1	0.6	1	18	15*	TO-5
2N2986	3	120	40	120	1	0.6	1	18	15*	TO-5
2N5074	3	200	30	110	0.5	2	3	40	70	TO-59
2N5075	3	200	90	250	0.5	2	3	40	70	TO-59
2N5076	3	250	30	110	0.5	2	3	40	70	TO-59
2N5077	3	250	90	250	0.5	2	3	40	70	TO-59
2N5838	3	250	8	40	*Note 1*	1	*Note 1*	*Note 1*	100	TO-3
2N5839	3	275	10	50	*Note 1*	1.5	*Note 1*	*Note 1*	100	TO-3
2N5840	3	350	10	50	*Note 1*	1.5	*Note 1*	*Note 1*	100	TO-3
2N5466	3	400	15	60	3	0.5	3	2.5	80*	TO-3
2N5467	3	400	15	60	3	0.5	3	2.5	80*	TO-3
2N5468	3	400	15	60	3	0.5	3	3	40*	TO-66
2N5469	3	400	15	60	3	0.5	3	3	40*	TO-66
2N5786	3.5	40	20	100	*Note 1*	1	*Note 1*	*Note 1*	10	TO-5
2N5785	3.5	50	20	100	*Note 1*	0.75	*Note 1*	*Note 1*	10	TO-5
2N5784	3.5	65	20	100	*Note 1*	0.5	*Note 1*	*Note 1*	10	TO-5
2N3902	3.5	400	30	90	1	0.8	1	Note 1	5	TO-3
2N5157	3.5	500	30	90	1	0.8	1	Note 1	5	TO-3

Note 1: Contact factory for values and more information.

3 - 3.5 AMP PNP

Sorted by I_C, then V_{CEO}

Ratings based on 25°C case temperature unless otherwise specified

Part Number	I_C max (A)	V_{CEO} max (V)	h_{FE} min	h_{FE} max	@ I_C (A)	$V_{CE(sat)}$ max (V)	@ I_C (A)	f_T min (MHz)	P_T max *T_C=100°C (W)	Package
2N6303	3	-80	30	150	1.5	-0.75	1.5	60	6	TO-5
2N3021	3	30	20	60	1	1.5	3	35**	25	TO-3
2N3024	3	30	50	180	1	1	3	35**	25	TO-3
2N3163	3	40	12	36	*Note 1*	0.75	*Note 1*	*Note 1*	85	TO-61
2N3171	3	40	12	36	*Note 1*	0.75	*Note 1*	*Note 1*	75	TO-3
2N3202	3	40	20	60	*Note 1*	3	*Note 1*	*Note 1*	8	TO-5
2N3719	3	40	25	180	1	0.75	1	35**	6	TO-3
2N3867	3	40	40	200	1.5	1.5	2.5	*Note 1*	10	TO-5; TO-39
2N3022	3	45	20	60	1	1.5	3	35**	25	TO-3
2N3025	3	45	50	180	1	1	3	35**	25	TO-3
2N3023	3	60	20	60	1	1.5	3	35**	25	TO-3
2N3026	3	60	50	180	1	1	3	35**	25	TO-3
2N3164	3	60	12	36	*Note 1*	0.75	*Note 1*	*Note 1*	85	TO-61
2N3172	3	60	12	36	*Note 1*	0.75	*Note 1*	*Note 1*	75	TO-3
2N3203	3	60	20	60	*Note 1*	0.3	*Note 1*	*Note 1*	8	TO-5
2N3720	3	60	25	180	1	0.75	1	35**	6	TO-5
2N3868	3	60	30	150	1.5	1.5	2.5	*Note 1*	10	TO-5; TO-39
2N3165	3	80	12	36	*Note 1*	0.75	*Note 1*	*Note 1*	85	TO-61
2N3173	3	80	12	36	*Note 1*	0.75	*Note 1*	*Note 1*	75	TO-3
2N3204	3	80	20	60	*Note 1*	0.3	*Note 1*	*Note 1*	8	TO-5
2N3166	3	100	12	36	*Note 1*	0.75	*Note 1*	*Note 1*	85	TO-61
2N3174	3	100	12	36	*Note 1*	0.75	*Note 1*	*Note 1*	75	TO-3
2N5783	3.5	40	20	100	*Note 1*	1	*Note 1*	*Note 1*	10	TO-5
2N5782	3.5	50	20	100	*Note 1*	0.75	*Note 1*	*Note 1*	10	TO-5
2N5781	3.5	65	20	100	*Note 1*	0.5	*Note 1*	*Note 1*	10	TO-5

Note 1: Contact factory for values and more information.

Hermetic Packaging

4 AMP NPN

Sorted by I_C, then V_{CEO}

Ratings based on 25°C case temperature unless otherwise specified

Part Number	I_C max (A)	V_{CEO} max (V)	h_{FE} min	h_{FE} max	@ I_C (A)	$V_{CE(sat)}$ max (V)	@ I_C (A)	f_T min (MHz)	P_T max *T_C=100°C (W)	Package
2N4910	4	40	20	100	*Note 1*	0.6	*Note 1*	*Note 1*	25	TO-66
2N5296	4	40	30	120	*Note 1*	1	*Note 1*	*Note 1*	36	TO-257
2N6121	4	45	25	100	*Note 1*	0.6	*Note 1*	*Note 1*	40	TO-257
2N5202	4	50	10	100	*Note 1*	1.2	*Note 1*	*Note 1*	35	TO-66
2N4877	4	60	20	100	*Note 1*	1	*Note 1*	*Note 1*	10	TO-5
2N4911	4	60	20	100	*Note 1*	0.6	*Note 1*	*Note 1*	25	TO-66
2N5298	4	60	20	80	*Note 1*	1	*Note 1*	*Note 1*	36	TO-257
2N6122	4	60	25	100	*Note 1*	0.6	*Note 1*	*Note 1*	40	TO-257
SPT35P3	4	60	2000	*Note 1*	2	1.5	2	*Note 1*	60	TO-3
2N5294	4	70	30	120	*Note 1*	1	*Note 1*	*Note 1*	36	TO-257
2N4912	4	80	20	100	*Note 1*	0.6	*Note 1*	*Note 1*	25	TO-66
SFT6039/5	4	80	100	*Note 1*	4	2	2	*Note 1*	*Note 1*	TO-5
SFT6039J	4	80	100	*Note 1*	4	2	2	*Note 1*	20	TO-257
SFT6039M	4	80	100	*Note 1*	4	2	2	*Note 1*	20	TO-254
SFT6039S.3	4	80	100	*Note 1*	4	2	2	*Note 1*	28.5	SMD.3
SFT6039S.5	4	80	100	*Note 1*	4	2	2	*Note 1*	31	SMD.5
2N6465	4	100	15	150	Note 1	3	*Note 1*	*Note 1*	40	TO-66
2N6466	4	120	15	150	Note 1	3	*Note 1*	*Note 1*	40	TO-66
2N6474	4	120	15	150	Note 1	1.2	*Note 1*	*Note 1*	40	TO-257
2N3766	4	60	40	160	0.5	2.5	1	*Note 1*	25	TO-66
2N3767	4	80	40	160	0.5	2.5	1	*Note 1*	25	TO-66

Note 1: Contact factory for values and more information.

Hermetic Packaging

4 AMP PNP

Sorted by I_C, then V_{CEO}

Ratings based on 25°C case temperature unless otherwise specified

Part Number	I_C max (A)	V_{CEO} max (V)	h_{FE} min	h_{FE} max	@ I_C (A)	$V_{CE(sat)}$ max (V)	@ I_C (A)	f_T min (MHz)	P_T max *T_C=100°C (W)	Package
2N6124	4	45	25	100	*Note 1*	0.6	*Note 1*	*Note 1*	40	TO-257
2N6049	4	55	25	100	*Note 1*	0.5	*Note 1*	*Note 1*	75	TO-66
2N3740A	4	60	10	Note 1	1	0.6	1	*Note 1*	25	TO-66
2N6125	4	60	25	100	*Note 1*	0.6	*Note 1*	*Note 1*	40	TO-257
2N3741	4	80	10	Note 1	1	0.6	1	*Note 1*	25	TO-66
SFT6036/5	4	80	750	15000	2	2	2	*Note 1*	*Note 1*	TO-5
SFT6036J	4	80	750	15000	2	2	2	*Note 1*	20	TO-257
SFT6036M	4	80	750	15000	2	2	2	*Note 1*	20	TO-254
SFT6036S.3	4	80	750	15000	2	2	2	*Note 1*	28.5	SMD.3
SFT6036S.5	4	80	750	15000	2	2	2	*Note 1*	31	SMD.5
2N6500	4	90	15	60	*Note 1*	1.5	*Note 1*	*Note 1*	35	TO-66
2N6467	4	100	15	150	*Note 1*	1.2	*Note 1*	*Note 1*	40	TO-66
2N6468	4	120	15	150	*Note 1*	1.2	*Note 1*	*Note 1*	40	TO-66
2N6476	4	120	15	150	*Note 1*	1.2	*Note 1*	*Note 1*	40	TO-257

Note 1: Contact factory for values and more information.

Hermetic Packaging

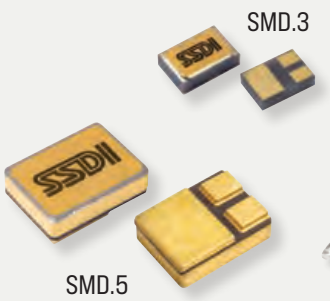

5 AMP NPN

Sorted by I_C, then V_{CEO}

Ratings based on 25°C case temperature unless otherwise specified

Part Number	I_C max (A)	V_{CEO} max (V)	h_{FE} min	h_{FE} max	@ I_C (A)	$V_{CE(sat)}$ max (V)	@ I_C (A)	f_T min (MHz)	P_T max *T_C=100°C (W)	Package
2N3469	5	25	100	Note 1	Note 1	0.5	Note 1	Note 1	1.2	TO-5
2N3621	5	40	40	Note 1	Note 1	0.75	Note 1	Note 1	30	TO-61
2N3622	5	40	40	Note 1	Note 1	0.75	Note 1	Note 1	30	TO-61
2N3623	5	40	30	150	Note 1	1.5	Note 1	Note 1	350	TO-3
2N3628	5	40	30	Note 1	Note 1	1.5	Note 1	Note 1	7.5	TO-5
2N3629	5	40	40	Note 1	Note 1	1.5	Note 1	Note 1	30	TO-61
2N3630	5	40	40	Note 1	Note 1	1.5	Note 1	Note 1	30	TO-61
2N3744	5	40	20	60	1	0.25	1	30	30*	TO-111/I
2N3747	5	40	40	120	1	0.25	1	40	30*	TO-111/I
2N3750	5	40	100	300	1	0.25	1	50	30*	TO-111/I
2N3852	5	40	50	150	Note 1	0.5	Note 1	Note 1	30	TO-59
2N3853	5	40	30	90	Note 1	0.5	Note 1	Note 1	30	TO-59
2N4231	5	40	25	100	Note 1	0.7	Note 1	Note 1	75	TO-66
2N4395	5	40	50	170	2	0.8	4.5	4	62.5	TO-3
2N4913	5	40	25	100	2.5	0.75	2.5	4	88	TO-3
2N5067	5	40	20	80	Note 1	0.4	Note 1	Note 1	87.5	TO-3
SFT3852/59	5	40	50	200	1	0.25	1	20	23	TO-59 (3 Pins)
SFT3852/59	5	40	50	200	1	2	5	20	23	TO-59 (3 Pins)
2N1209	5	45	20	80	Note 1	5	Note 1	Note 1	85	TO-61
2N3017	5	50	60	150	Note 1	0.75	Note 1	Note 1	5	TO-5
2N1212	5	60	12	36	Note 1	5	Note 1	Note 1	85	TO-61
2N2657	5	60	40	120	1	0.5	1	20	4*	TO-5
2N2877	5	60	20	60	1	0.25	1	30	30*	TO-111
2N2878	5	60	40	120	1	0.25	1	50	30*	TO-111
2N3745	5	60	20	60	1	0.25	1	30	30*	TO-111/I
2N3748	5	60	40	120	1	0.25	1	40	30*	TO-111/I
2N3751	5	60	100	300	1	0.25	1	50	30*	TO-111/I
2N4111	5	60	40	120	2	0.6	2	50	37.5	TO-3
2N4112	5	60	100	300	2	0.6	2	60	37.5	TO-3
2N4232A	5	60	25	100	Note 1	0.7	Note 1	Note 1	75	TO-66
2N4307	5	60	50	150	1	1	5	40	11	TO-5
2N4311	5	60	40	120	1	1.4	5	40	11	TO-5
2N4396	5	60	40	170	2	0.8	4.5	4	62.5	TO-3
2N4895	5	60	40	120	2	1	5	50	4*	TO-39
2N4896	5	60	100	300	2	1	5	60**	4*	TO-39
2N4914	5	60	25	100	2.5	0.75	2.5	4	88	TO-3
2N5068	5	60	20	80	Note 1	0.4	Note 1	Note 1	87.5	TO-3
2N5606	5	60	70	200	2.5	0.75	2.5	60**	25	TO-66
2N5614	5	60	70	200	2.5	0.75	2.5	60**	58	TO-3
2N1724	5	80	30	120	2	0.6	2	Note 1	3	TO-61

Note 1: Contact factory for values and more information.

5 AMP NPN (continued)

Sorted by I_C, then V_{CEO}

Ratings based on 25°C case temperature unless otherwise specified

Part Number	I_C max (A)	V_{CEO} max (V)	h_{FE} min	h_{FE} max	@ I_C (A)	$V_{CE(sat)}$ max (V)	@ I_C (A)	f_T min (MHz)	P_T max *T_C=100°C (W)	Package
2N1724A	5	80	30	120	2	0.6	2	Note 1	50*	TO-61
2N1725	5	80	50	150	Note 1	1	Note 1	Note 1	50	TO-61
2N2658	5	80	40	120	1	0.5	1	20	4*	TO-5
2N2879	5	80	20	60	1	0.25	1	30	30*	TO-111
2N2880	5	80	40	120	1	0.25	1	Note 1	30*	TO-59
2N2890	5	80	30	90	1	0.5	1	30	5	TO-5
2N2891	5	80	50	150	1	0.75	2	30	5	TO-5
2N2892	5	80	30	90	Note 1	0.75	Note 1	Note 1	5	TO-63
2N2893	5	80	50	150	Note 1	0.75	Note 1	Note 1	30	TO-63
2N3746	5	80	20	60	1	0.25	1	30	30*	TO-111/I
2N3749	5	80	40	120	1	0.25	1	Note 1	30*	TO-111/I
2N3752	5	80	100	300	1	0.25	1	50	30*	TO-111/I
2N3850	5	80	50	150	Note 1	0.5	Note 1	Note 1	30	TO-59
2N3851	5	80	30	90	Note 1	0.5	Note 1	Note 1	30	TO-59
2N3996	5	80	40	120	1	2	5	Note 1	30*	TO-111/I
2N3997	5	80	80	240	1	2	5	Note 1	30*	TO-111/I
2N3998	5	80	40	120	1	2	5	Note 1	30*	TO-111
2N3999	5	80	80	240	1	2	5	Note 1	30*	TO-111
2N4113	5	80	40	120	2	0.6	2	50	37.5	TO-3
2N4114	5	80	100	300	Note 1	1.5	Note 1	Note 1	15	TO-3
2N4116	5	80	100	300	Note 1	0.6	Note 1	Note 1	37	TO-59
2N4233	5	80	25	100	Note 1	0.7	Note 1	Note 1	75	TO-66
2N4233A	5	80	25	100	Note 1	0.7	Note 1	Note 1	75	TO-66
2N4305	5	80	50	150	1	1	5	40	11	TO-5
2N4309	5	80	50	150	1	1.4	5	40	11	TO-5
2N4897	5	80	40	120	2	1	5	50	4*	TO-39
2N4915	5	80	25	100	2.5	0.75	2.5	4	88	TO-3
2N5002	5	80	30	90	2.5	1.5	5	Note 1	58	TO-59
2N5004	5	80	70	200	2.5	1.5	5	Note 1	58	TO-59
2N5069	5	80	20	80	Note 1	0.4	Note 1	Note 1	87.5	TO-3
2N5326	5	80	50	150	Note 1	1	Note 1	Note 1	30	TO-111
2N5336	5	80	30	120	2	1.2	5	30	6	TO-39
2N5337	5	80	60	240	2	1.2	5	30	6	TO-39
2N5608	5	80	30	90	2.5	0.75	2.5	50**	25	TO-66
2N5610	5	80	70	200	2.5	0.75	2.5	60**	25	TO-66
2N5616	5	80	30	90	2.5	0.75	2.5	50**	58	TO-3
2N5618	5	80	70	120	2.5	0.75	2.5	60**	58	TO-3
2N5729	5	80	30	300	2	1.5	5	30	11	TO-5
2N6350	5	80	2000	10000	5	1.5	5	Note 1	5	TO-33
2N6352	5	80	2000	10000	5	1.5	5	Note 1	25	TO-24

Note 1: Contact factory for values and more information.

(continued) 5 AMP NPN

Sorted by I_C, then V_{CEO}

Ratings based on 25°C case temperature unless otherwise specified

Part Number	I_C max (A)	V_{CEO} max (V)	h_{FE} min	h_{FE} max	@ I_C (A)	$V_{CE(sat)}$ max (V)	@ I_C (A)	f_T min (MHz)	P_T max *T_C=100°C (W)	Package
2N5284	5	100	30	90	2.5	0.75	2.5	40**	58	TO-59
2N5285	5	100	70	120	2.5	0.75	2.5	50**	58	TO-59
2N5338	5	100	30	120	2	1.2	5	30	6	TO-39
2N5339	5	100	60	240	2	0.7	2	*Note 1*	1	TO-39
2N5612	5	100	30	90	2.5	0.75	2.5	50**	25	TO-66
2N5620	5	100	30	90	2.5	0.75	2.5	5**	58	TO-3
2N5541	5	130	30	90	5	0.6	5	20	5*	TO-5
2N6351	5	150	1000	10000	5	2.5	5	*Note 1*	5	TO-33
2N6353	5	150	1000	10000	5	2.5	5	*Note 1*	25	TO-24
SFT502	5	150	20	*Note 1*	5	1.5	5	70	10	TO-5
SFT502/G	5	150	20	*Note 1*	5	1.5	5	70	10	Cerpack
SFT504	5	150	40	*Note 1*	5	1.5	5	70	10	TO-5
SFT504/G	5	150	40	*Note 1*	5	1.5	5	70	10	Cerpack
SFT5666/39	5	180	40	250	2	1.5	5	30	15	TO-39
2N5664	5	200	40	120	1	0.4	3	*Note 1*	2.5	TO-66; TO-5; TO-39
2N5666	5	200	40	120	1	0.4	3	*Note 1*	1.22	TO-66; TO-5; TO-39
2N7376	5	200	40	120	1	0.4	3	*Note 1*	30*	TO-254
2N5804	5	225	10	100	*Note 1*	2	*Note 1*	*Note 1*	62	TO-3
SPT6233/66	5	225	15	125	1	2.5	5	20	50	TO-66
SPT6233J	5	225	15	125	1	2.5	5	20	33	TO-257
SPT6233M	5	225	15	125	1	2.5	5	20	39	TO-254
2N6234	5	275	25	125	*Note 1*	0.5	*Note 1*	*Note 1*	50	TO-66
SPT6234/66	5	275	15	125	1	2.5	5	20	50	TO-66
SPT6234J	5	275	15	125	1	2.5	5	20	33	TO-257
SPT6234M	5	275	15	125	1	2.5	5	20	39	TO-254
2N5240	5	300	20	80	*Note 1*	2.5	*Note 1*	*Note 1*	100	TO-3
2N5665	5	300	25	75	1	0.4	3	*Note 1*	2.5	TO-66; TO-5; TO-39
2N5667	5	300	25	75	1	0.4	3	*Note 1*	1.22	TO-66; TO-5; TO-39
2N5805	5	300	10	100	*Note 1*	2	*Note 1*	*Note 1*	62	TO-3
2N6542	5	300	7	35	*Note 1*	1	*Note 1*	*Note 1*	100	TO-3
2N7375	5	300	25	75	1	0.4	3	*Note 1*	30*	TO-257
2N7377	5	300	25	75	1	0.4	3	*Note 1*	30*	TO-254
SPT6235/66	5	325	15	125	1	2.5	5	20	50	TO-66
SPT6235J	5	325	15	125	1	2.5	5	20	33	TO-257
SPT6235M	5	325	15	125	1	2.5	5	20	39	TO-254
2N6543	5	400	7	35	*Note 1*	1	*Note 1*	*Note 1*	100	TO-3

Note 1: Contact factory for values and more information.

5 AMP PNP

Sorted by I_C, then V_{CEO}

Ratings based on 25°C case temperature unless otherwise specified

Part Number	I_C max (A)	V_{CEO} max (V)	h_{FE} min	h_{FE} max	@ I_C (A)	$V_{CE(sat)}$ max (V)	@ I_C (A)	f_T min (MHz)	P_T max *T_C=100°C (W)	Package
2N3175	5	40	10	30	Note 1	1	Note 1	Note 1	85	TO-61
2N3187	5	40	10	30	Note 1	0.9	Note 1	Note 1	85	TO-61
2N3195	5	40	10	30	Note 1	0.9	Note 1	Note 1	75	TO-3
2N4901	5	40	20	80	Note 1	0.4	Note 1	Note 1	87.5	TO-3
2N4904	5	40	25	100	Note 1	1	Note 1	Note 1	87.5	TO-3
2N3176	5	60	10	30	Note 1	1	Note 1	Note 1	85	TO-61
2N3184	5	60	10	30	Note 1	1	Note 1	Note 1	75	TO-3
2N3188	5	60	10	30	Note 1	0.9	Note 1	Note 1	85	TO-61
2N3196	5	60	10	30	Note 1	0.9	Note 1	Note 1	75	TO-3
2N4902	5	60	20	80	Note 1	0.4	Note 1	Note 1	87.5	TO-3
2N4905	5	60	25	100	Note 1	1	Note 1	Note 1	87.5	TO-3
2N5605	5	60	70	200	2.5	0.75	2.5	40**	25	TO-66
2N5613	5	60	70	200	2.5	1.5	5	35**	58	TO-3
2N5867	5	60	20	100	Note 1	2	Note 1	Note 1	87.5	TO-3
2N6246	5	60	20	100	Note 1	1.3	Note 1	Note 1	125	TO-3
2N3177	5	80	10	30	Note 1	1	Note 1	Note 1	85	TO-61
2N3183	5	80	10	30	Note 1	1	Note 1	Note 1	75	TO-3
2N3185	5	80	10	30	Note 1	1	Note 1	Note 1	75	TO-3
2N3189	5	80	10	30	Note 1	0.9	Note 1	Note 1	85	TO-61
2N3197	5	80	10	30	Note 1	0.9	Note 1	Note 1	75	TO-3
2N4903	5	80	20	80	Note 1	0.4	Note 1	Note 1	87.5	TO-3
2N4906	5	80	25	100	Note 1	1	Note 1	Note 1	87.5	TO-3
2N5003	5	80	30	90	2.5	1.5	5	30**	58	TO-59
2N5005	5	80	70	200	2.5	1.5	5	35**	58	TO-59
2N5312	5	80	30	90	Note 1	1.75	Note 1	Note 1	87.5	TO-61
2N5384	5	80	20	80	2	0.6	2	30	30*	TO-111/I
2N5385	5	80	20	80	2	0.6	2	30	30*	TO-111/I
2N5404	5	80	20	60	2	0.6	2	30**	5*	TO-5
2N5406	5	80	40	120	2	0.6	2	30**	5*	TO-5
2N5408	5	80	20	60	2	0.6	2	30**	30*	TO-111/I
2N5410	5	80	40	120	2	0.6	2	30**	30*	TO-111/I
2N5607	5	80	30	90	2.5	0.75	2.5	30**	25	TO-66
2N5608	5	80	30	90	Note 1	1.5	Note 1	Note 1	25	TO-66
2N5609	5	80	70	200	2.5	0.75	2.5	40**	25	TO-66
2N5615	5	80	30	90	2.5	1.5	5	30**	58	TO-3
2N5617	5	80	70	200	2.5	1.5	5	35**	58	TO-3
2N5868	5	80	20	100	Note 1	2	Note 1	Note 1	87.5	TO-3
2N6190	5	80	30	120	2	0.7	2	30	10	TO-39
2N6191	5	80	60	240	Note 1	1.2	Note 1	Note 1	10	TO-5
SFT5001/59	5	80	30	Note 1	5	1	5	80	30	TO-59 (3 Pins)

Note 1: Contact factory for values and more information.

(continued) 5 AMP PNP

Sorted by I_C, then V_{CEO}

Ratings based on 25°C case temperature unless otherwise specified

Part Number	I_C max (A)	V_{CEO} max (V)	h_{FE} min	h_{FE} max	@ I_C (A)	$V_{CE(sat)}$ max (V)	@ I_C (A)	f_T min (MHz)	P_T max *T_C=100°C (W)	Package
SFT5001/66	5	80	30	*Note 1*	5	1	5	80	30	TO-66
SFT5001J	5	80	30	*Note 1*	5	1	5	80	30	TO-257
SFT5001S.5	5	80	30	*Note 1*	5	1	5	80	30	SMD.5
SFT5553AG	5	80	25	120	5	0.5	2.5	40	40	Cerpack
SFT5553AJ	5	80	25	120	5	0.5	2.5	40	20	TO-257
2N3178	5	100	10	30	*Note 1*	1	*Note 1*	*Note 1*	85	TO-61
2N3186	5	100	10	30	*Note 1*	1	*Note 1*	*Note 1*	75	TO-3
2N3190	5	100	10	30	*Note 1*	0.9	*Note 1*	*Note 1*	85	TO-61
2N3198	5	100	10	30	*Note 1*	0.9	*Note 1*	*Note 1*	75	TO-3
2N5286	5	100	30	90	2.5	0.75	2.5	30**	58	TO-59
2N5287	5	100	70	120	2.5	0.75	2.5	35**	58	TO-59
2N5405	5	100	20	60	2	0.6	2	30**	5*	TO-5
2N5407	5	100	40	120	2	0.6	2	30**	5*	TO-5
2N5409	5	100	20	60	2	0.6	2	30**	30*	TO-111/I
2N5411	5	100	40	120	2	0.6	2	30**	30*	TO-111/I
2N5611	5	100	30	90	2.5	0.75	2.5	30**	25	TO-66
2N5619	5	100	30	90	2.5	1.5	5	30**	58	TO-3
2N5677	5	100	30	90	*Note 1*	0.6	*Note 1*	*Note 1*	87.5	TO-61
2N6192	5	100	30	120	2	0.7	2	30	10	TO-39
2N6193	5	100	60	240	2	0.7	2	*Note 1*	17.5	TO-39
SFT3303/111	5	120	40	*Note 1*	2	0.75	2	30	50	TO-111
SFT3303G	5	120	40	*Note 1*	2	0.75	2	30	50	Cerpack
SFT3303J	5	120	40	*Note 1*	2	0.75	2	30	50	TO-257
SFT3403/111	5	120	40	*Note 1*	2	0.75	2	30	50	TO-111
SFT3403G	5	120	40	*Note 1*	2	0.75	2	30	50	Cerpack
SFT3403J	5	120	40	*Note 1*	2	0.75	2	30	50	TO-257
SFT501	5	150	20	*Note 1*	5	0.75	2.5	40	10	TO-5
SFT501/G	5	150	20	*Note 1*	5	0.75	2.5	40	10	Cerpack
SFT501J	5	150	20	*Note 1*	5	0.75	2.5	40	20	TO-257
SFT501JC	5	150	20	*Note 1*	5	0.75	2.5	40	20	TO-257
SFT503	5	150	40	*Note 1*	5	0.75	2.5	40	10	TO-5
SFT503/G	5	150	40	*Note 1*	5	0.75	2.5	40	10	Cerpack
SFT503J	5	150	40	*Note 1*	5	0.75	2.5	40	20	TO-257
SFT503JC	5	150	40	*Note 1*	5	0.75	2.5	40	20	TO-257

Note 1: Contact factory for values and more information.

6 AMP NPN

Sorted by I_C, then V_{CEO}

Ratings based on 25°C case temperature unless otherwise specified

Part Number	I_C max (A)	V_{CEO} max (V)	h_{FE} min	h_{FE} max	@ I_C (A)	$V_{CE(sat)}$ max (V)	@ I_C (A)	f_T min (MHz)	P_T max *T_C=100°C (W)	Package
2N1487	6	40	15	45	1.5	3	1.5	Note 1	75	TO-3
2N1489	6	40	25	75	1.5	1	1.5	Note 1	75	TO-3
2N1702	6	40	15	60	Note 1	3.2	Note 1	Note 1	75	TO-3
2N6374	6	40	20	100	Note 1	1	Note 1	Note 1	40	TO-66
2N1488	6	55	15	45	1.5	3	1.5	Note 1	75	TO-3
2N1490	6	55	25	75	1.5	1	1.5	Note 1	75	TO-3
2N6373	6	60	20	100	Note 1	1	Note 1	Note 1	40	TO-66
2N6372	6	80	20	100	Note 1	1	Note 1	Note 1	40	TO-66
2N5758	6	100	25	100	Note 1	1	Note 1	Note 1	150	TO-3
2N5759	6	120	20	80	Note 1	1	Note 1	Note 1	150	TO-3
2N5760	6	140	15	60	Note 1	1	Note 1	Note 1	150	TO-3

6 AMP PNP

Sorted by I_C, then V_{CEO}

Ratings based on 25°C case temperature unless otherwise specified

Part Number	I_C max (A)	V_{CEO} max (V)	h_{FE} min	h_{FE} max	@ I_C (A)	$V_{CE(sat)}$ max (V)	@ I_C (A)	f_T min (MHz)	P_T max *T_C=100°C (W)	Package
2N5956	6	40	20	100	Note 1	1	Note 1	Note 1	40	TO-66
2N5955	6	60	20	100	Note 1	1	Note 1	Note 1	40	TO-66
2N5954	6	80	20	100	Note 1	1	Note 1	Note 1	40	TO-66
2N6229	6	100	25	100	Note 1	1	Note 1	Note 1	150	TO-3
2N6227	6	120	20	80	Note 1	1	Note 1	Note 1	150	TO-3
2N6228	6	140	15	60	Note 1	1	Note 1	Note 1	150	TO-3

Note 1: Contact factory for values and more information.

Hermetic Packaging

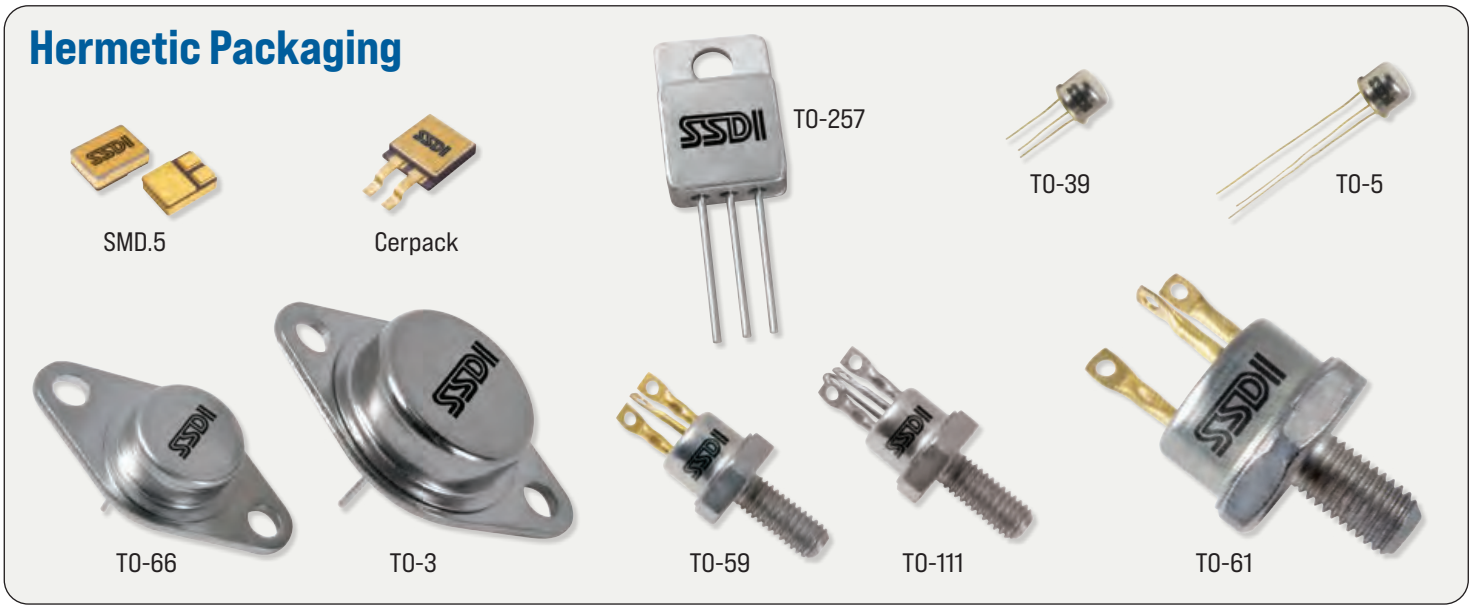

7 - 7.5 AMP NPN

Sorted by I_C, then V_{CEO}

Ratings based on 25°C case temperature unless otherwise specified

Part Number	I_C max (A)	V_{CEO} max (V)	h_{FE} min	h_{FE} max	@ I_C (A)	$V_{CE(sat)}$ max (V)	@ I_C (A)	f_T min (MHz)	P_T max *T_C=100°C (W)	Package
2N6288	7	30	30	150	*Note 1*	3.5	*Note 1*	*Note 1*	40	TO-257
2N5490	7	40	20	100	*Note 1*	1	*Note 1*	*Note 1*	50	TO-257
2N5494	7	40	20	100	*Note 1*	1	*Note 1*	*Note 1*	50	TO-257
2N3878	7	50	50	200	*Note 1*	2	*Note 1*	*Note 1*	35	TO-66
2N6290	7	50	30	150	*Note 1*	3.5	*Note 1*	*Note 1*	40	TO-257
2N5492	7	55	20	100	*Note 1*	1	*Note 1*	*Note 1*	50	TO-257
2N3487	7	60	20	60	3	1.2	3	10	115	TO-61
2N3490	7	60	40	120	5	1.5	5	10	115	TO-61
2N5873	7	60	20	100	*Note 1*	1	*Note 1*	*Note 1*	115	TO-3
2N5496	7	70	20	100	*Note 1*	1	*Note 1*	*Note 1*	50	TO-257
2N6292	7	70	30	150	*Note 1*	3.5	*Note 1*	*Note 1*	40	TO-257
2N3879	7	75	20	80	4	1.2	4	*Note 1*	35	TO-66
2N3488	7	80	20	60	3	1.2	3	10	115	TO-61
2N3491	7	80	40	120	5	1.5	5	10	115	TO-61
2N5346	7	80	30	120	*Note 1*	0.7	*Note 1*	*Note 1*	60	TO-59
2N5347	7	80	60	240	*Note 1*	0.7	*Note 1*	*Note 1*	60	TO-59
2N5427	7	80	30	120	2	0.7	2	30	40	TO-66
2N5428	7	80	60	240	2	0.7	2	30	40	TO-66
2N5874	7	80	20	100	*Note 1*	1	*Note 1*	*Note 1*	90	TO-3
2N6510	7	80	10	50	*Note 1*	1.5	*Note 1*	*Note 1*	120	TO-3
2N3489	7	100	15	45	3	1.2	3	10	115	TO-61
2N3492	7	100	30	90	5	1.5	5	10	115	TO-61
2N5348	7	100	30	120	*Note 1*	0.7	*Note 1*	*Note 1*	60	TO-59
2N5349	7	100	60	240	*Note 1*	0.7	*Note 1*	*Note 1*	60	TO-59
2N5429	7	100	30	120	2	0.7	2	30	40	TO-66
2N5430	7	100	60	240	2	0.7	2	30	40	TO-66
2N5387	7	200	25	100	2	2	5	15	100*	TO-61
2N5388	7	250	25	100	2	2	5	15	100*	TO-61
2N6078	7	250	10	70	1.2	0.5	1.2	1	25.7*	TO-66
2N6511	7	250	10	50	*Note 1*	1.5	*Note 1*	*Note 1*	120	TO-3
2N6077	7	275	10	70	1.2	0.5	1.2	1	25.7*	TO-66
2N5389	7	300	25	100	2	2	5	15	100*	TO-61
2N6512	7	300	10	50	*Note 1*	1.5	*Note 1*	*Note 1*	120	TO-3
2N6514	7	300	10	50	*Note 1*	1.5	*Note 1*	*Note 1*	120	TO-3
2N6079	7	350	12	50	1.2	0.5	1.2	1	25.7*	TO-66
2N6513	7	350	10	50	*Note 1*	1.5	*Note 1*	*Note 1*	120	TO-3
2N3445	7.5	60	20	60	*Note 1*	1.5	*Note 1*	*Note 1*	115	TO-3
2N3447	7.5	60	40	120	*Note 1*	1.5	*Note 1*	*Note 1*	115	TO-3
2N3446	7.5	80	20	60	*Note 1*	1.5	*Note 1*	*Note 1*	115	TO-3
2N3448	7.5	80	40	120	*Note 1*	1.5	*Note 1*	*Note 1*	115	TO-3

Note 1: Contact factory for values and more information.

7 AMP PNP

Sorted by I_C, then V_{CEO}

Ratings based on 25°C case temperature unless otherwise specified

Part Number	I_C max (A)	V_{CEO} max (V)	h_{FE} min	h_{FE} max	@ I_C (A)	$V_{CE(sat)}$ max (V)	@ I_C (A)	f_T min (MHz)	P_T max *T_C=100°C (W)	Package
2N6111	7	30	30	150	*Note 1*	3.5	*Note 1*	*Note 1*	40	TO-257
2N6109	7	50	30	150	*Note 1*	3.5	*Note 1*	*Note 1*	40	TO-257
2N5871	7	60	20	100	*Note 1*	1	*Note 1*	*Note 1*	115	TO-3
2N6317E3	7	60	20	*Note 1*	0.5	2	7	*Note 1*	90	TO-66
2N6107	7	70	30	150	*Note 1*	3.5	*Note 1*	*Note 1*	40	TO-257
2N5872	7	80	20	100	*Note 1*	1	*Note 1*	*Note 1*	90	TO-3
2N6318E3	7	80	20	*Note 1*	0.5	2	7	*Note 1*	90	TO-66

8 AMP NPN

Sorted by I_C, then V_{CEO}

Ratings based on 25°C case temperature unless otherwise specified

Part Number	I_C max (A)	V_{CEO} max (V)	h_{FE} min	h_{FE} max	@ I_C (A)	$V_{CE(sat)}$ max (V)	@ I_C (A)	f_T min (MHz)	P_T max *T_C=100°C (W)	Package
2N6386	8	40	1000	2000	*Note 1*	2	*Note 1*	*Note 1*	65	TO-257
2N6043	8	60	1000	2000	*Note 1*	2	*Note 1*	*Note 1*	75	TO-257
2N6044	8	80	1000	2000	*Note 1*	2	*Note 1*	*Note 1*	75	TO-257
2N6045	8	100	1000	2000	*Note 1*	2	*Note 1*	*Note 1*	75	TO-257
2N6306	8	250	5	30	0.5	5	8	*Note 1*	125	TO-3
2N6544	8	300	7	35	*Note 1*	1.5	*Note 1*	*Note 1*	125	TO-3
2N6671	8	300	10	40	5	1	5	*Note 1*	150	TO-3
2N6308	8	350	5	30	0.3	5	8	*Note 1*	125	TO-3
2N6673	8	400	10	40	5	1	5	*Note 1*	150	TO-3

8 AMP PNP

Sorted by I_C, then V_{CEO}

Ratings based on 25°C case temperature unless otherwise specified

Part Number	I_C max (A)	V_{CEO} max (V)	h_{FE} min	h_{FE} max	@ I_C (A)	$V_{CE(sat)}$ max (V)	@ I_C (A)	f_T min (MHz)	P_T max *T_C=100°C (W)	Package
2N6666	8	40	1000	2000	*Note 1*	2	*Note 1*	*Note 1*	65	TO-257
2N6040	8	60	1000	2000	*Note 1*	2	*Note 1*	*Note 1*	75	TO-257
2N6041	8	80	1000	2000	*Note 1*	2	*Note 1*	*Note 1*	75	TO-257
2N6042	8	100	1000	2000	*Note 1*	2	*Note 1*	*Note 1*	75	TO-257

Note 1: Contact factory for values and more information.

10 AMP NPN

Sorted by I_C, then V_{CEO}

Ratings based on 25°C case temperature unless otherwise specified

Part Number	I_C max (A)	V_{CEO} max (V)	h_{FE} min	h_{FE} max	@ I_C (A)	$V_{CE(sat)}$ max (V)	@ I_C (A)	f_T min (MHz)	P_T max *T_C=100°C (W)	Package
2N3018	10	50	60	150	Note 1	0.75	Note 1	Note 1	25	TO-61
2N5049	10	50	15	60	Note 1	2.5	Note 1	Note 1	100	TO-61
2N2811	10	60	20	60	5	0.5	5	15	40*	TO-61
2N2812	10	60	50	150	1	0.5	5	Note 1	50*	TO-61
2N3920	10	60	100	300	Note 1	1.2	Note 1	Note 1	15	TO-3
2N5083	10	60	40	120	Note 1	0.5	Note 1	Note 1	20	TO-59
2N5084	10	60	100	300	Note 1	0.5	Note 1	Note 1	20	TO-111/I
2N5622	10	60	70	200	5	0.9	5	40	116	TO-3
2N5877	10	60	20	100	Note 1	1	Note 1	Note 1	150	TO-3
2N6387	10	60	1000	2000	Note 1	2	Note 1	Note 1	65	TO-257
2N4150	10	70	40	120	5	0.6	5	Note 1	15	TO-5
2N2813	10	80	20	60	5	0.5	5	15	40*	TO-61
2N2814	10	80	50	150	1	0.5	5	Note 1	50*	TO-61
2N4301	10	80	30	120	5	0.4	5	40	50*	TO-61
2N5006	10	80	30	90	5	0.9	5	30	116	TO-61/I
2N5008	10	80	70	200	5	0.9	5	40	116	TO-61/I
2N5085	10	80	40	120	Note 1	0.5	Note 1	Note 1	20	TO-111/I
2N5313	10	80	30	90	10	1.5	10	30	50*	TO-61
2N5317	10	80	30	90	5	0.6	5	30	50*	TO-61/I
2N5327	10	80	100	300	1	0.4	3	50	5*	TO-5
2N5328	10	80	50	150	Note 1	0.6	Note 1	Note 1	30	TO-111/I
2N5552	10	80	50	150	Note 1	0.5	Note 1	Note 1	15	TO-5
2N5624	10	80	30	90	5	0.9	5	30	116	TO-3
2N5626	10	80	70	200	5	0.9	5	40	116	TO-3
2N5658	10	80	50	150	Note 1	0.5	Note 1	Note 1	30	TO-59
2N5659	10	80	50	150	Note 1	0.5	Note 1	Note 1	30	TO-111
2N5730	10	80	30	300	2	1.2	5	30	52.5	TO-59
2N5854	10	80	30	90	5	0.9	5	20	66*	TO-61/I
2N6128	10	80	30	120	5	0.9	50	40	67*	TO-61/I
2N6217	10	80	20	80	5	0.5	5	20	71*	TO-3
2N6270	10	80	20	100	Note 1	1	Note 1	Note 1	262	TO-3
2N6388	10	80	1000	2000	Note 1	2	Note 1	Note 1	65	TO-257
2N6495	10	80	10	60	Note 1	1.5	Note 1	Note 1	70	TO-66
2N7368	10	80	30	140	3	1	5	Note 1	115	TO-254
SFT5152/5	10	80	30	250	2.5	0.75	2.5	60	10	TO-5
SFT5152G	10	80	30	250	2.5	0.75	2.5	60	10	Cerpack
SFT5152J	10	80	30	250	2.5	0.75	2.5	60	10	TO-257
SFT5152S.5	10	80	30	250	2.5	0.75	2.5	60	10	SMD.5
SFT5154/5	10	80	70	250	2.5	0.75	2.5	70	10	TO-5
SFT5154G	10	80	70	250	2.5	0.75	2.5	70	10	Cerpack

Note 1: Contact factory for values and more information.

10 AMP NPN (continued)

Sorted by I_C, then V_{CEO}

Ratings based on 25°C case temperature unless otherwise specified

Part Number	I_C max (A)	V_{CEO} max (V)	h_{FE} min	h_{FE} max	@ I_C (A)	$V_{CE(sat)}$ max (V)	@ I_C (A)	f_T min (MHz)	P_T max *T_C=100°C (W)	Package
SFT5154J	10	80	70	250	2.5	0.75	2.5	70	10	TO-257
SFT5154S.5	10	80	70	250	2.5	0.75	2.5	70	10	SMD.5
SPT5006/3	10	80	30	90	5	0.9	5	30	100	TO-3
SPT5006/61	10	80	30	90	5	0.9	5	30	100	TO-61 (3 Pins)
SPT5006M	10	80	30	90	5	0.9	5	30	100	TO-254
SPT5006S1	10	80	30	90	5	0.9	5	30	100	SMD1
SPT5008/3	10	80	70	200	5	0.9	5	40	100	TO-3
SPT5008/61	10	80	70	200	5	0.9	5	40	100	TO-61 (3 Pins)
SPT5008M	10	80	70	200	5	0.9	5	40	100	TO-254
SPT5008S1	10	80	70	200	5	0.9	5	40	100	SMD1
2N1902	10	100	10	30	*Note 1*	1	*Note 1*	*Note 1*	125	TO-61
2N1904	10	100	20	60	*Note 1*	1	*Note 1*	*Note 1*	125	TO-61
2N4070	10	100	40	120	5	0.6	5	20	65*	TO-3
2N5048	10	100	15	60	*Note 1*	2	*Note 1*	*Note 1*	100	TO-61
2N5288	10	100	30	90	5	0.9	5	30	116	TO-61/I
2N5289	10	100	70	200	5	0.9	5	40	116	TO-61/I
2N5315	10	100	30	90	10	1.5	10	30	50*	TO-61
2N5319	10	100	30	90	5	0.6	5	30	50*	TO-61/I
2N5628	10	100	30	90	5	0.9	5	30	116	TO-3
2N5632	10	100	25	100	*Note 1*	1	*Note 1*	*Note 1*	150	TO-3
2N6232	10	100	25	100	5	0.7	5	*Note 1*	15	TO-5
2N5237	10	120	40	120	5	0.6	5	*Note 1*	15	TO-5
2N5633	10	120	20	80	*Note 1*	1	*Note 1*	*Note 1*	150	TO-3
2N6354	10	120	10	100	*Note 1*	1	*Note 1*	*Note 1*	140	TO-3
SFT5002/59	10	120	20	150	5	0.75	2.5	60	50	TO-59 (3 Pins)
SFT5002J	10	120	20	150	5	0.75	2.5	60	50	TO-257
SFT5002M	10	120	20	150	5	0.75	2.5	60	50	TO-254
SFT5004/59	10	120	70	200	2.5	0.75	2.5	70	50	TO-59 (3 Pins)
SFT5004J	10	120	70	200	2.5	0.75	2.5	70	50	TO-257
SFT5004M	10	120	70	200	2.5	0.75	2.5	70	50	TO-254
2N5542	10	130	30	90	5	2.5	10	20	50*	TO-61
2N5634	10	140	15	60	*Note 1*	1	*Note 1*	*Note 1*	150	TO-3
2N4071	10	150	40	120	5	0.6	5	20	65*	TO-3
2N6216	10	150	20	80	5	0.5	5	20	71*	TO-3
2N5238	10	170	40	120	5	0.6	5	*Note 1*	15	TO-5
2N5264	10	180	30	300	*Note 1*	0.65	*Note 1*	*Note 1*	87	TO-3
2N5218	10	200	15	120	5	0.6	5	40	50*	TO-61
2N6249	10	200	10	50	10	1.5	10	*Note 1*	175	TO-3
2N5239	10	225	20	80	*Note 1*	2.5	*Note 1*	*Note 1*	100	TO-3
2N6250	10	275	8	50	10	1.5	10	*Note 1*	175	TO-3

Note 1: Contact factory for values and more information.

Sorted by I_C, then V_{CEO}

Ratings based on 25°C case temperature unless otherwise specified

Part Number	I_C max (A)	V_{CEO} max (V)	h_{FE} min	h_{FE} max	@ I_C (A)	$V_{CE(sat)}$ max (V)	@ I_C (A)	f_T min (MHz)	P_T max *T_C=100°C (W)	Package
2N5540	10	300	20	60	5	2.5	10	20	50*	TO-61
2N6561	10	300	10	50	10	0.75	10	15	220	TO-3
2N6563	10	300	10	50	10	0.75	10	15	175	TO-61/I
2N6251	10	350	6	50	10	1.5	10	*Note 1*	175	TO-3
2N6582	10	350	7	35	*Note 1*	1.5	*Note 1*	*Note 1*	125	TO-3
2N6588	10	350	7	35	*Note 1*	1.5	*Note 1*	*Note 1*	125	TO-61
2N5241	10	400	15	35	2.5	0.7	2.5	*Note 1*	150	TO-3
2N6580	10	400	7	35	*Note 1*	1.5	*Note 1*	*Note 1*	125	TO-3
2N6583	10	400	7	35	*Note 1*	1.5	*Note 1*	*Note 1*	125	TO-3
2N6560	10	450	10	40	5	0.75	5	10	220	TO-3
2N6562	10	450	10	40	5	0.75	5	10	175	TO-61/I
2N6581	10	450	7	35	*Note 1*	1.5	*Note 1*	*Note 1*	125	TO-3
2N6590	10	450	7	35	*Note 1*	1.5	*Note 1*	*Note 1*	125	TO-61

Note 1: Contact factory for values and more information.

Hermetic Packaging

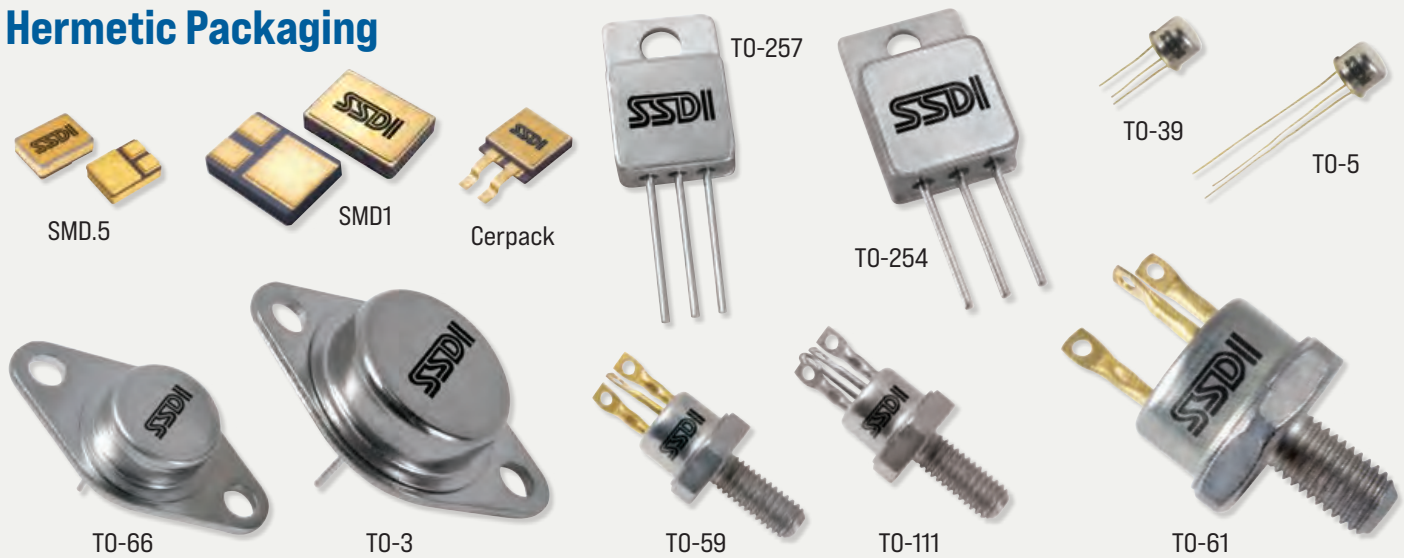

10 AMP PNP

Sorted by I_C, then V_{CEO}

Ratings based on 25°C case temperature unless otherwise specified

Part Number	I_C max (A)	V_{CEO} max (V)	h_{FE} min	h_{FE} max	@ I_C (A)	$V_{CE(sat)}$ max (V)	@ I_C (A)	f_T min (MHz)	P_T max *T_C=100°C (W)	Package
2N4907	10	40	20	80	*Note 1*	0.75	*Note 1*	*Note 1*	150	TO-3
2N4908	10	60	20	80	*Note 1*	0.75	*Note 1*	*Note 1*	150	TO-3
2N5621	10	60	70	200	5	0.9	5	40	116	TO-3
2N5737	10	60	20	80	5	0.5	5	10	50*	TO-3
2N5739	10	60	20	80	5	0.5	5	10	20*	TO-66
2N5875	10	60	20	100	*Note 1*	1	*Note 1*	*Note 1*	150	TO-3
2N6667	10	60	1000	2000	*Note 1*	2	*Note 1*	*Note 1*	65	TO-257
2N4909	10	80	20	80	*Note 1*	0.75	*Note 1*	*Note 1*	150	TO-3
2N5007	10	80	30	90	5	0.9	5	30**	116	TO-61/I
2N5009	10	80	70	200	5	0.99	5	40**	116	TO-61/I
2N5312	10	80	30	90	10	1.5	10	30	50*	TO-61/I
2N5316	10	80	30	90	5	0.6	5	30	50*	TO-61/I
2N5386	10	80	20	80	6	0.6	6	30	50	TO-61/I
2N5623	10	80	30	90	5	0.9	5	30	116	TO-3
2N5625	10	80	70	200	5	0.9	5	40	116	TO-3
2N5853	10	80	30	90	5	0.9	5	15	66*	TO-61/I
2N5876	10	80	20	100	*Note 1*	1	*Note 1*	*Note 1*	150	TO-3
2N6127	10	80	30	120	5	0.9	5	30	67*	TO-61/I
2N6182	10	80	30	120	*Note 1*	0.7	*Note 1*	*Note 1*	60	TO-59
2N6183	10	80	60	240	*Note 1*	0.7	*Note 1*	*Note 1*	60	TO-59
2N6186	10	80	30	120	*Note 1*	1.2	*Note 1*	*Note 1*	60	TO-59
2N6187	10	80	60	240	*Note 1*	1.2	*Note 1*	*Note 1*	60	TO-59
2N6668	10	80	1000	2000	*Note 1*	2	*Note 1*	*Note 1*	65	TO-257
2N7369	10	80	30	140	3	1	5	*Note 1*	115	TO-254
SFT5151/5	10	80	20	*Note 1*	0.1	0.75	2.5	60	10	TO-5
SFT5151G	10	80	20	*Note 1*	0.1	0.75	2.5	60	10	Cerpack
SFT5151J	10	80	20	*Note 1*	0.1	0.75	2.5	60	10	TO-257
SFT5151S.5	10	80	20	*Note 1*	0.1	0.75	2.5	60	10	SMD.5
SFT5153/5	10	80	50	*Note 1*	0.1	0.75	2.5	70	10	TO-5
SFT5153G	10	80	50	*Note 1*	0.1	0.75	2.5	70	10	Cerpack
SFT5153J	10	80	50	*Note 1*	0.1	0.75	2.5	70	10	Cerpack
SFT5153S.5	10	80	50	*Note 1*	0.1	0.75	2.5	70	10	SMD.5
SFT6650/3	10	80	1000	20000	5	2	5	*Note 1*	5	TO-3
2N5290	10	100	30	90	5	0.9	5	30	116	TO-61/I
2N5291	10	100	70	200	5	0.9	5	40	116	TO-61/I
2N5314	10	100	30	90	10	1.5	10	30	50*	TO-61/I
2N5318	10	100	30	90	5	0.6	5	30	50*	TO-61/I
2N5627	10	100	30	90	5	0.9	5	30	116	TO-3
2N5677	10	100	30	90	5	0.6	5	20	50*	TO-61
2N5738	10	100	20	80	5	0.5	5	10	50*	TO-3

Note 1: Contact factory for values and more information.

(continued) 10 AMP PNP

Sorted by I_C, then V_{CEO}

Ratings based on 25°C case temperature unless otherwise specified

Part Number	I_C max (A)	V_{CEO} max (V)	h_{FE} min	h_{FE} max	@ I_C (A)	$V_{CE(sat)}$ max (V)	@ I_C (A)	f_T min (MHz)	P_T max *T_C=100°C (W)	Package
2N5740	10	100	20	80	5	0.5	5	10	20*	TO-66
2N6184	10	100	30	120	*Note 1*	0.7	*Note 1*	*Note 1*	60	TO-59
2N6185	10	100	60	240	*Note 1*	0.7	*Note 1*	*Note 1*	60	TO-59
2N6188	10	100	30	120	*Note 1*	1.2	*Note 1*	*Note 1*	60	TO-59
2N6189	10	100	60	240	*Note 1*	1.2	*Note 1*	*Note 1*	60	TO-59
2N6248	10	100	20	100	5	3.5	10	10	125	TO-3
2N6230	10	120	20	80	*Note 1*	1	*Note 1*	*Note 1*	150	TO-3
2N6231	10	140	15	60	*Note 1*	1	*Note 1*	*Note 1*	150	TO-3

12 AMP NPN

Sorted by I_C, then V_{CEO}

Ratings based on 25°C case temperature unless otherwise specified

Part Number	I_C max (A)	V_{CEO} max (V)	h_{FE} min	h_{FE} max	@ I_C (A)	$V_{CE(sat)}$ max (V)	@ I_C (A)	f_T min (MHz)	P_T max *T_C=100°C (W)	Package
2N6569	12	40	15	200	*Note 1*	1.5	*Note 1*	*Note 1*	100	TO-3
2N7142	12	60	60	150	*Note 1*	0.5	*Note 1*	*Note 1*	87	TO-3
2N7143	12	80	60	150	*Note 1*	0.5	*Note 1*	*Note 1*	87	TO-3
2N6579	12	350	7	35	*Note 1*	1.5	*Note 1*	*Note 1*	125	TO-3

12 AMP PNP

Sorted by I_C, then V_{CEO}

Ratings based on 25°C case temperature unless otherwise specified

Part Number	I_C max (A)	V_{CEO} max (V)	h_{FE} min	h_{FE} max	@ I_C (A)	$V_{CE(sat)}$ max (V)	@ I_C (A)	f_T min (MHz)	P_T max *T_C=100°C (W)	Package
2N6594	12	40	15	200	*Note 1*	1.5	*Note 1*	*Note 1*	100	TO-3
2N5386	12	80	20	80	*Note 1*	0.6	*Note 1*	*Note 1*	50	TO-61

Note 1: Contact factory for values and more information.

15 AMP NPN

Sorted by I_C, then V_{CEO}

Ratings based on 25°C case temperature unless otherwise specified

Part Number	I_C max (A)	V_{CEO} max (V)	h_{FE} min	h_{FE} max	@ I_C (A)	$V_{CE(sat)}$ max (V)	@ I_C (A)	f_T min (MHz)	P_T max *T_C=100°C (W)	Package
2N6470	15	40	20	150	*Note 1*	1.3	*Note 1*	*Note 1*	125	TO-3
2N6486	15	40	20	150	*Note 1*	1.3	*Note 1*	*Note 1*	75	TO-257
2N5412	15	60	10	160	*Note 1*	1.5	*Note 1*	*Note 1*	100	TO-61
2N5881	15	60	20	100	*Note 1*	1	*Note 1*	*Note 1*	160	TO-3
2N6471	15	60	20	150	*Note 1*	1.3	*Note 1*	*Note 1*	125	TO-3
2N6487	15	60	20	150	*Note 1*	1.3	*Note 1*	*Note 1*	75	TO-257
2N3055	15	70	20	60	4	0.75	4	*Note 1*	117	TO-3
2N5882	15	80	20	100	*Note 1*	1	*Note 1*	*Note 1*	160	TO-3
2N5970	15	80	20	100	*Note 1*	2	*Note 1*	*Note 1*	85	TO-3
2N6472	15	80	20	150	*Note 1*	1.3	*Note 1*	*Note 1*	125	TO-3
2N6488	15	80	20	150	*Note 1*	1.3	*Note 1*	*Note 1*	75	TO-257
2N6496	15	110	12	100	*Note 1*	1	*Note 1*	*Note 1*	140	TO-3
SFT4100/3	15	165	15	45	5	1.2	5	8	120	TO-3
SFT4100M	15	165	15	45	5	1.2	5	8	120	TO-254
SFT4100S1	15	165	15	45	5	1.2	5	8	120	SMD1
2N6546	15	300	6	30	0.5	1.5	10	*Note 1*	175	TO-3
2N6674	15	300	15	40	1	1	10	*Note 1*	175	TO-3
2N6676	15	300	15	40	1	1	15	*Note 1*	175	TO-3
2N6689	15	300	15	40	1	1	10	*Note 1*	175	TO-61
2N6691	15	300	15	40	1	1	15	*Note 1*	175	TO-61
2N6677	15	350	8	*Note 1*	*Note 1*	1	*Note 1*	*Note 1*	175	TO-3
2N6547	15	400	6	30	0.5	1.5	10	*Note 1*	175	TO-3
2N6675	15	400	15	40	1	1	10	*Note 1*	175	TO-3
2N6678	15	400	15	40	1	1	15	*Note 1*	175	TO-3
2N6690	15	400	15	40	1	1	10	*Note 1*	175	TO-61
2N6693	15	400	15	40	1	1	15	*Note 1*	175	TO-61
SFT6678/3	15	400	8	20	15	1	15	*Note 1*	175	TO-3
SFT6678M	15	400	8	20	15	1	15	*Note 1*	175	TO-254
SFT6678Z	15	400	8	20	15	1	15	*Note 1*	175	TO-254Z
SPT6693	15	400	8	20	15	1	15	15	175	TO-61 (3 Pins)
2N6836	15	450	7.5	30	*Note 1*	2.5	*Note 1*	*Note 1*	175	TO-3

Note 1: Contact factory for values and more information.

15 AMP PNP

Sorted by I_C, then V_{CEO}

Ratings based on 25°C case temperature unless otherwise specified

Part Number	I_C max (A)	V_{CEO} max (V)	h_{FE} min	h_{FE} max	@ I_C (A)	$V_{CE(sat)}$ max (V)	@ I_C (A)	f_T min (MHz)	P_T max *T_C=100°C (W)	Package
2N6469	15	40	20	150	*Note 1*	1.3	*Note 1*	*Note 1*	125	TO-3
2N6489	15	40	20	150	*Note 1*	1.3	*Note 1*	*Note 1*	75	TO-257
2N5879	15	60	20	100	*Note 1*	1	*Note 1*	*Note 1*	160	TO-3
2N6246	15	60	20	100	7	2.5	15	10	125	TO-3
2N6490	15	60	20	150	*Note 1*	1.3	*Note 1*	*Note 1*	75	TO-257
2N5880	15	80	20	100	*Note 1*	1	*Note 1*	*Note 1*	160	TO-3
2N6247	15	80	20	100	6	3.5	15	10	125	TO-3
2N6491	15	80	20	150	*Note 1*	1.3	*Note 1*	*Note 1*	75	TO-257
2N6248	15	100	20	100	*Note 1*	1.3	*Note 1*	*Note 1*	125	TO-3

16 AMP NPN

Sorted by I_C, then V_{CEO}

Ratings based on 25°C case temperature unless otherwise specified

Part Number	I_C max (A)	V_{CEO} max (V)	h_{FE} min	h_{FE} max	@ I_C (A)	$V_{CE(sat)}$ max (V)	@ I_C (A)	f_T min (MHz)	P_T max *T_C=100°C (W)	Package
2N5629	16	100	25	100	*Note 1*	1	*Note 1*	*Note 1*	200	TO-3
2N5630	16	120	20	80	*Note 1*	1	*Note 1*	*Note 1*	200	TO-3
2N5631	16	140	15	60	*Note 1*	1	*Note 1*	*Note 1*	200	TO-3

16 AMP PNP

Sorted by I_C, then V_{CEO}

Ratings based on 25°C case temperature unless otherwise specified

Part Number	I_C max (A)	V_{CEO} max (V)	h_{FE} min	h_{FE} max	@ I_C (A)	$V_{CE(sat)}$ max (V)	@ I_C (A)	f_T min (MHz)	P_T max *T_C=100°C (W)	Package
2N6029	16	100	25	100	*Note 1*	1	*Note 1*	*Note 1*	200	TO-3
2N6030	16	120	20	80	*Note 1*	1	*Note 1*	*Note 1*	200	TO-3
2N6031	16	140	15	60	*Note 1*	1	*Note 1*	*Note 1*	200	TO-3
2N6609	16	140	15	60	*Note 1*	1.4	*Note 1*	*Note 1*	150	TO-3

Note 1: Contact factory for values and more information.

20 AMP NPN

Sorted by I_C, then V_{CEO}

Ratings based on 25°C case temperature unless otherwise specified

Part Number	I_C max (A)	V_{CEO} max (V)	h_{FE} min	h_{FE} max	@ I_C (A)	$V_{CE(sat)}$ max (V)	@ I_C (A)	f_T min (MHz)	P_T max *T_C=100°C (W)	Package
2N3597	20	40	40	120	10	0.5	10	30	100*	TO-63
2N1936	20	60	10	50	*Note 1*	0.75	*Note 1*	*Note 1*	150	TO-63
2N3598	20	60	40	120	10	0.5	10	30	100*	TO-63
2N4210	20	60	20	100	10	1	10	10	100*	TO-63
2N6046	20	60	20	100	20	2	20	25	114	TO-63
2N5039	20	75	12	48	2	1	12	*Note 1*	140	TO-3
2N1937	20	80	10	50	*Note 1*	0.75	*Note 1*	*Note 1*	150	TO-63
2N3599	20	80	40	120	10	0.5	10	30	100*	TO-63
2N4211	20	80	20	100	10	1	10	10	100*	TO-63
2N5303	20	80	15	60	10	1.5	15	*Note 1*	115	TO-3
2N5313	20	80	30	90	*Note 1*	1.5	*Note 1*	*Note 1*	87.5	TO-61
2N5731	20	80	30	300	5	1.2	10	30	87.5	TO-61/I
2N5732	20	80	30	300	5	1.2	10	40	87.5	TO-3
2N5038	20	90	12	48	2	1	12	*Note 1*	140	TO-3
2N5329	20	90	40	120	10	1.8	20	40	65*	TO-61/I
2N5315	20	100	30	90	*Note 1*	1.5	*Note 1*	*Note 1*	87.5	TO-61
2N5957	20	100	30	120	10	0.9	10	10	100*	TO-61/I
2N5959	20	100	30	120	10	0.9	10	10	100*	TO-61
2N6047	20	100	20	100	20	2	20	25	114	TO-63
2N5539	20	130	25	75	10	0.8	15	20	100*	TO-63
2N6048	20	140	20	100	20	2	20	25	114	TO-63
2N3846	20	200	12	60	10	0.75	10	*Note 1*	150	TO-63
2N3848	20	200	40	200	*Note 1*	1	*Note 1*	*Note 1*	150	TO-63
2N6688	20	200	20	80	*Note 1*	1.5	*Note 1*	*Note 1*	200	TO-3
2N3847	20	300	12	60	10	0.75	10	*Note 1*	150	TO-63
2N3849	20	300	40	200	*Note 1*	1	*Note 1*	*Note 1*	150	TO-63
SFT10000/3	20	350	40	400	10	3	20	*Note 1*	175	TO-3
SPT6060/3	20	350	15	60	20	2	20	*Note 1*	125	TO-3
2N6837	20	450	7.5	30	*Note 1*	3	*Note 1*	*Note 1*	250	TO-3

Note 1: Contact factory for values and more information.

Hermetic Packaging

TO-66

TO-3

TO-254

TO-254Z

TO-61

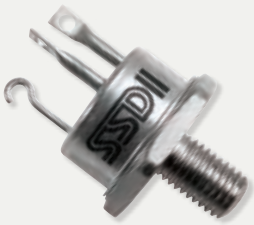

TO-63

20 AMP PNP

Sorted by I_C, then V_{CEO}

Ratings based on 25°C case temperature unless otherwise specified

Part Number	I_C max (A)	V_{CEO} max (V)	h_{FE} min	h_{FE} max	@ I_C (A)	$V_{CE(sat)}$ max (V)	@ I_C (A)	f_T min (MHz)	P_T max *T_C=100°C (W)	Package
2N5741	20	60	20	80	10	1.5	10	10	65*	TO-3
2N5743	20	60	20	80	10	1.5	10	10	25*	TO-66
2N5745	20	80	15	60	15	1	10	*Note 1*	115	TO-3
2N5678	20	100	25	75	10	0.8	15	20	100*	TO-63
2N5742	20	100	20	80	10	1.5	10	10	65*	TO-3
2N5744	20	100	20	80	10	1.5	10	10	25*	TO-66
2N5958	20	100	30	120	10	0.9	10	10	100*	TO-61
2N5960	20	100	30	120	10	0.9	10	10	100*	TO-61/I

25 AMP NPN

Sorted by I_C, then V_{CEO}

Ratings based on 25°C case temperature unless otherwise specified

Part Number	I_C max (A)	V_{CEO} max (V)	h_{FE} min	h_{FE} max	@ I_C (A)	$V_{CE(sat)}$ max (V)	@ I_C (A)	f_T min (MHz)	P_T max *T_C=100°C (W)	Package
2N3266	25	60	20	80	15	1.6	20	20	100*	TO-63
2N5885	25	60	20	100	10	1	15	4	200	TO-3
2N5886	25	80	20	100	10	1	15	4	200	TO-3
2N3265	25	90	22	55	15	1	20	20	100*	TO-63
2N6338	25	100	30	120	10	1	10	40	200	TO-3
SFT6338/3	25	100	30	120	10	2.5	25	*Note 1*	200	TO-3
SFT6338M	25	100	30	120	10	2.5	25	*Note 1*	200	TO-254
SFT6338Z	25	100	30	120	10	2.5	25	*Note 1*	200	TO-254Z
2N6339	25	120	30	120	10	1	10	40	200	TO-3
SFT6339/3	25	120	30	120	10	2.5	25	*Note 1*	200	TO-3
SFT6339M	25	120	30	120	10	2.5	25	*Note 1*	200	TO-254
SFT6339Z	25	120	30	120	10	2.5	25	*Note 1*	200	TO-254Z
2SPT6341SD	25	125	30	220	10	1.8	25	4	200	Die
2N6340	25	140	30	120	10	1	10	40	200	TO-3
SFT6340/3	25	140	30	120	10	2.5	25	*Note 1*	200	TO-3
SFT6340M	25	140	30	120	10	2.5	25	*Note 1*	200	TO-254
SFT6340Z	25	140	30	120	10	2.5	25	*Note 1*	200	TO-254Z
2N6341	25	150	30	120	10	1	10	40	200	TO-3
SFT6341/3	25	150	30	120	10	2.5	25	*Note 1*	200	TO-3
SFT6341M	25	150	30	120	10	2.5	25	*Note 1*	200	TO-254
SFT6341Z	25	150	30	120	10	2.5	25	*Note 1*	200	TO-254Z
2N6686	25	160	25	100	*Note 1*	1.5	*Note 1*	*Note 1*	200	TO-3
2N6687	25	180	25	100	*Note 1*	1.5	*Note 1*	*Note 1*	200	TO-3

Note 1: Contact factory for values and more information.

25 AMP PNP

Sorted by I_C, then V_{CEO}

Ratings based on 25°C case temperature unless otherwise specified

Part Number	I_C max (A)	V_{CEO} max (V)	h_{FE} min	h_{FE} max	@ I_C (A)	$V_{CE(sat)}$ max (V)	@ I_C (A)	f_T min (MHz)	P_T max *T_C=100°C (W)	Package
2N5883	25	60	20	100	10	1	15	4	200	TO-3
2N5884	25	80	20	100	10	1	15	4	200	TO-3
2N6436	25	80	30	120	*Note 1*	1	*Note 1*	*Note 1*	200	TO-3
2N6437	25	100	30	120	10	1	10	*Note 1*	200	TO-3
2N6438	25	120	30	120	10	1	10	*Note 1*	200	TO-3

30 AMP NPN

Sorted by I_C, then V_{CEO}

Ratings based on 25°C case temperature unless otherwise specified

Part Number	I_C max (A)	V_{CEO} max (V)	h_{FE} min	h_{FE} max	@ I_C (A)	$V_{CE(sat)}$ max (V)	@ I_C (A)	f_T min (MHz)	P_T max *T_C=100°C (W)	Package
2N5301	30	40	15	60	*Note 1*	2	*Note 1*	*Note 1*	200	TO-3
2N5302	30	60	15	60	15	1.8	15	*Note 1*	115	TO-3
2N6326	30	60	6	30	*Note 1*	1.5	*Note 1*	*Note 1*	200	TO-3
2N4002	30	80	20	80	15	1.2	30	30	100	TO-63
2N5733	30	80	30	300	10	1.2	20	25**	175	TO-63
2N5734	30	80	30	300	10	1.2	20	25**	175	TO-3
2N5935	30	80	20	100	*Note 1*	2	*Note 1*	*Note 1*	175	TO-3
2N6272	30	80	20	100	*Note 1*	1	*Note 1*	*Note 1*	262	TO-63
2N6327	30	80	6	30	*Note 1*	1.5	*Note 1*	*Note 1*	200	TO-3
2N5330	30	90	40	120	10	0.6	10	40**	80*	TO-61/I
2N5331	30	90	40	120	10	0.6	10	40**	100*	TO-63
2N5671	30	90	20	100	15	0.75	15	30**	140	TO-3
SFT5671/3	30	90	20	100	15	0.75	15	*Note 1*	140	TO-3
SFT5671M	30	90	20	100	15	0.77	15	*Note 1*	116	TO-254
SFT5671S1	30	90	20	100	15	0.75	15	*Note 1*	175	SMD1
2N4003	30	100	20	80	15	1.2	30	30	100	TO-63
2N5966	30	100	25	100	15	1.2	15	10	125	TO-63
2N5968	30	100	30	120	*Note 1*	1.2	*Note 1*	*Note 1*	220	TO-63
2N6271	30	100	20	100	*Note 1*	1	*Note 1*	*Note 1*	262	TO-3
2N6328	30	100	6	30	*Note 1*	1.5	*Note 1*	*Note 1*	200	TO-3
2N5560	30	120	30	90	*Note 1*	0.8	*Note 1*	*Note 1*	150	TO-63
2N5672	30	120	20	100	15	0.75	15	30**	140	TO-3
2N6339	30	120	30	120	*Note 1*	1.8	*Note 1*	*Note 1*	200	TO-3
SFT5672/3	30	120	20	100	15	0.75	15	*Note 1*	140	TO-3
SFT5672M	30	120	20	100	15	0.77	15	*Note 1*	116	TO-254
SFT5672S1	30	120	20	100	15	0.75	15	*Note 1*	175	SMD1

Note 1: Contact factory for values and more information.

(continued) 30 AMP NPN

Sorted by I_C, then V_{CEO}

Ratings based on 25°C case temperature unless otherwise specified

Part Number	I_C max (A)	V_{CEO} max (V)	h_{FE} min	h_{FE} max	@ I_C (A)	$V_{CE(sat)}$ max (V)	@ I_C (A)	f_T min (MHz)	P_T max *T_C=100°C (W)	Package
2N6340	30	140	30	120	Note 1	1.8	Note 1	Note 1	200	TO-3
2N5931	30	160	20	100	Note 1	2	Note 1	Note 1	175	TO-3
2N5584	30	180	40	120	10	0.5	10	30**	100*	TO-63
2N6322	30	200	40	150	Note 1	1.5	Note 1	Note 1	350	TO-3
2N6324	30	200	40	150	Note 1	1.5	Note 1	Note 1	350	TO-63
2N2779	30	250	10	Note 1	Note 1	1.5	Note 1	Note 1	200	TO-63
2N2780	30	300	10	Note 1	Note 1	1.5	Note 1	Note 1	200	TO-63
2N6323	30	300	30	150	Note 1	1.5	Note 1	Note 1	350	TO-3
2N6325	30	300	30	150	Note 1	1.5	Note 1	Note 1	350	TO-63

30 AMP PNP

Sorted by I_C, then V_{CEO}

Ratings based on 25°C case temperature unless otherwise specified

Part Number	I_C max (A)	V_{CEO} max (V)	h_{FE} min	h_{FE} max	@ I_C (A)	$V_{CE(sat)}$ max (V)	@ I_C (A)	f_T min (MHz)	P_T max *T_C=100°C (W)	Package
2N4398	30	40	15	60	Note 1	-1	Note 1	Note 1	200	TO-3
2N4399	30	60	15	60	15	0.75	10	Note 1	115	TO-3
2N6329	30	60	6	30	Note 1	1.5	Note 1	Note 1	200	TO-3
SFT4399/3	30	60	15	60	15	0.55	5	Note 1	5	TO-3
2N6330	30	80	6	30	Note 1	1.5	Note 1	Note 1	200	TO-3
2N5967	30	100	25	100	15	1.2	15	Note 1	125*	TO-63
2N6331	30	100	6	30	Note 1	1.5	Note 1	Note 1	200	TO-3

Note 1: Contact factory for values and more information.

Hermetic Packaging

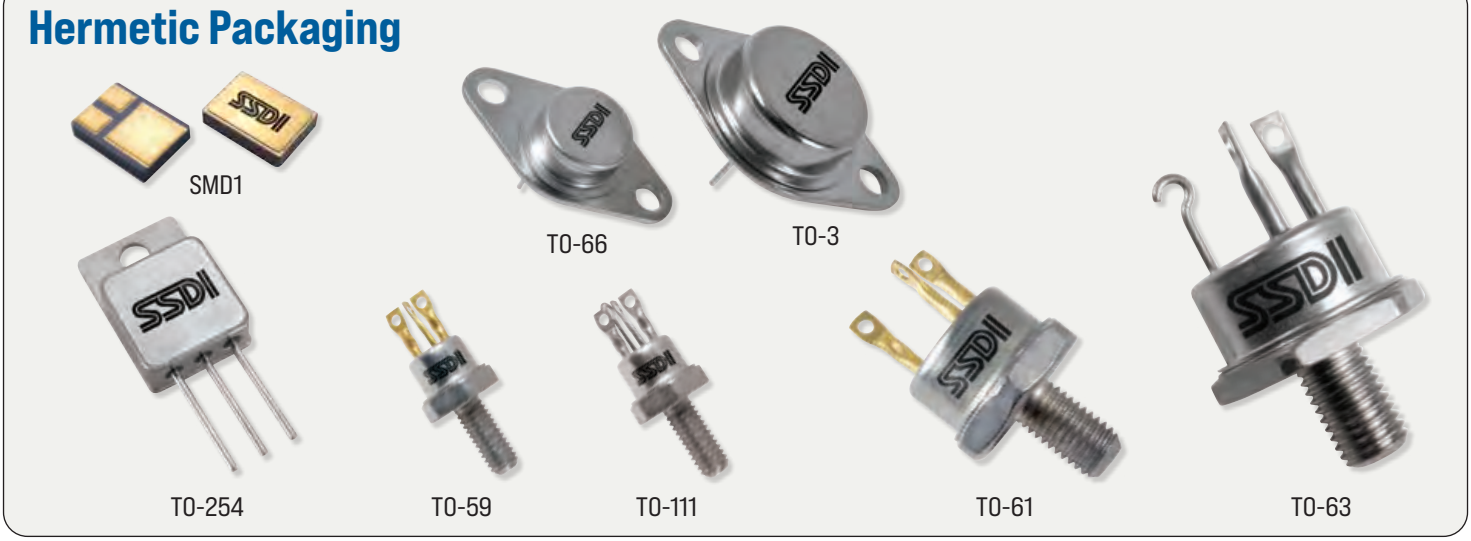

40 AMP NPN

Sorted by I_C, then V_{CEO}

Ratings based on 25°C case temperature unless otherwise specified

Part Number	I_C max (A)	V_{CEO} max (V)	h_{FE} min	h_{FE} max	@ I_C (A)	$V_{CE(sat)}$ max (V)	@ I_C (A)	f_T min (MHz)	P_T max *T_C=100°C (W)	Package
2N6033	40	120	10	50	40	1	40	*Note 1*	140	TO-3

40 AMP PNP

Sorted by I_C, then V_{CEO}

Ratings based on 25°C case temperature unless otherwise specified

Part Number	I_C max (A)	V_{CEO} max (V)	h_{FE} min	h_{FE} max	@ I_C (A)	$V_{CE(sat)}$ max (V)	@ I_C (A)	f_T min (MHz)	P_T max *T_C=100°C (W)	Package
2N5969	40	100	30	120	*Note 1*	1.8	*Note 1*	*Note 1*	220	TO-63

50 AMP NPN

Sorted by I_C, then V_{CEO}

Ratings based on 25°C case temperature unless otherwise specified

Part Number	I_C max (A)	V_{CEO} max (V)	h_{FE} min	h_{FE} max	@ I_C (A)	$V_{CE(sat)}$ max (V)	@ I_C (A)	f_T min (MHz)	P_T max *T_C=100°C (W)	Package
2N5685	50	60	15	60	25	1	25	*Note 1*	171	TO-3
2N5686	50	80	15	60	25	1	25	*Note 1*	171	TO-3
2N6215	50	80	25	150	25	0.8	25	20	125*	TO-63
SFT6032/3	50	90	10	50	50	1.3	50	*Note 1*	140	TO-3
2N6060	50	100	20	100	30	0.8	20	*Note 1*	150*	TO-63
2N6062	50	100	20	100	30	0.8	20	*Note 1*	150	TO-63
2N6063	50	100	20	100	30	2.6	50	*Note 1*	150	TO-63
2N6274	50	100	30	120	20	1	20	*Note 1*	143	TO-3
2N6278	50	100	30	120	20	1.2	20	30	250	TO-63
2N5926	50	120	10	40	50	0.6	50	0.5	200*	TO-63
2N6275	50	120	30	120	*Note 1*	3	*Note 1*	*Note 1*	250	TO-3
2N6276	50	120	30	120	*Note 1*	3	*Note 1*	*Note 1*	250	TO-3
2N6279	50	120	30	120	20	1.2	20	30	250	TO-63
SFT6033/3	50	120	10	50	50	1	40	*Note 1*	140	TO-3
SFT5672E/3	50	130	20	100	15	0.75	15	*Note 1*	140	TO-3
SFT5672EM	50	130	20	100	15	0.77	15	*Note 1*	116	TO-254
SFT5672ES1	50	130	20	100	15	0.75	15	*Note 1*	175	SMD1
2N6280	50	140	30	120	20	1.2	20	30	250	TO-63
2N6277	50	150	30	120	20	1	20	*Note 1*	143	TO-3
2N6281	50	150	30	120	20	1.2	20	30	250	TO-63
SFT6284N	50	250	400	*Note 1*	50	3	50	2	350	TO-258
SFT6284P	50	250	400	*Note 1*	50	3	50	2	350	TO-259
SFT10015/3	50	400	10	*Note 1*	40	5	50	*Note 1*	250	TO-3

Note 1: Contact factory for values and more information.

50 AMP PNP

Sorted by I_C, then V_{CEO}

Ratings based on 25°C case temperature unless otherwise specified

Part Number	I_C max (A)	V_{CEO} max (V)	h_{FE} min	h_{FE} max	@ I_C (A)	$V_{CE(sat)}$ max (V)	@ I_C (A)	f_T min (MHz)	P_T max *T_C=100°C (W)	Package
2N5683	50	60	15	60	25	1	25	*Note 1*	171	TO-3
2N5684	50	80	15	60	25	1	25	*Note 1*	171	TO-3
2N6377	50	80	30	120	*Note 1*	1.2	*Note 1*	*Note 1*	250	TO-3
2N6380	50	80	30	120	*Note 1*	-1.2	*Note 1*	*Note 1*	250	TO-63
2N6061	50	100	20	100	30	2.6	50	*Note 1*	150*	TO-63
2N6226	50	100	25	100	*Note 1*	1	*Note 1*	*Note 1*	125	TO-3
2N6378	50	100	30	120	20	1	20	*Note 1*	143	TO-3
2N6381	50	100	30	120	*Note 1*	-1.2	*Note 1*	*Note 1*	250	TO-63
2N6379	50	120	30	120	20	1	20	*Note 1*	143	TO-3
2N6382	50	120	30	120	*Note 1*	1.2	*Note 1*	*Note 1*	250	TO-63
SFT6287N	50	120	400	*Note 1*	50	*Note 1*	*Note 1*	1.5	350	TO-258
SFT6287P	50	120	400	*Note 1*	50	*Note 1*	*Note 1*	1.5	350	TO-259

80 AMP NPN

Sorted by I_C, then V_{CEO}

Ratings based on 25°C case temperature unless otherwise specified

Part Number	I_C max (A)	V_{CEO} max (V)	h_{FE} min	h_{FE} max	@ I_C (A)	$V_{CE(sat)}$ max (V)	@ I_C (A)	f_T min (MHz)	P_T max *T_C=100°C (W)	Package
2N5587	80	120	10	30	80	2	80	0.5	350	TO-114
2N5588	80	160	10	30	80	2	80	0.5	350	TO-114

Note 1: Contact factory for values and more information.

Hermetic Packaging

SMD1

TO-3

TO-254

TO-63

90 AMP NPN

Sorted by I_C, then V_{CEO}

Ratings based on 25°C case temperature unless otherwise specified

Part Number	I_C max (A)	V_{CEO} max (V)	h_{FE} min	h_{FE} max	@Ic (A)	$V_{CE(sat)}$ max (V)	@ I_C (A)	f_T min (MHz)	P_T max *T_C=100°C (W)	Package
2N4865	90	80	10	40	70	2	70	10	200	TO-114
2N5250	90	100	10	40	70	2	70	10	200	TO-114
2N4866	90	120	10	40	70	2.5	70	10	350	TO-114
2N5251	90	150	10	40	70	2	70	10	200	TO-114

100 - 200 AMP NPN

Sorted by I_C, then V_{CEO}

Ratings based on 25°C case temperature unless otherwise specified

Part Number	I_C max (A)	V_{CEO} max (V)	h_{FE} min	h_{FE} max	@Ic (A)	$V_{CE(sat)}$ max (V)	@ I_C (A)	f_T min (MHz)	P_T max *T_C=100°C (W)	Package
SFT5926/63	100	120	10	100	50	1.5	90	*Note 1*	350	TO-63
SFT2010	200	100	5	*Note 1*	200	3	200	30	600	TO-3
SFT2012	200	120	5	*Note 1*	200	3	200	30	600	TO-3
SFT2014	200	140	5	*Note 1*	200	3	200	30	600	TO-3

Note 1: Contact factory for values and more information.

Hermetic Packaging

TO-3

TO-63

Small Signal Packaging Options
(1) Gullwing = (2) TO-18, TO-46, TO-5, or Cersot (UB) packages

Features

- Dual device
- Space qualified
- Hermetically sealed
- Replaces two TO-18 packages for a savings of 75% board space using dual packages
- Flexible leads provide stress relief
- Package allows for easy inspection
- Small package size / weight for optimal board use
- Available with small signal diodes, MOSFETs, and JFETs
- Matched or complementary pairs available
- TX, TXV, and S levels screening available - contact factory.

NPN

Device Type	I_C (mA)	BV_{CEO}	Device Type	I_C (mA)	BV_{CEO}	Device Type	I_C (mA)	BV_{CEO}
2N2639	30	45	2N3946	50	60	2N2060	500	60
2N2640	30	45	2N3947	50	60	2N2223/A	500	60
2N2641	30	45	2N708	100	15	2N2652	500	60
2N2642	30	45	2N5066	100	20	2N1893	500	80
2N2643	30	45	2N3726	100	45	2N5793	600	40
2N2644	30	45	2N3727	100	45	2N5794	600	40
2N2913	30	45	2N720/A	150	80	2N5795	600	60
2N2914	30	45	2N3013	200	15	2N5796	600	60
2N2915	30	45	2N4449	200	15	2N3053/A	700	60
2N2916	30	45	2N3014	200	20	2N1714	750	60
2N2917	30	45	2N2368	500	15	2N2218/A	800	30
2N2918	30	45	2N2369/A	500	15	2N2219/A	800	30
2N2919	30	60	2N3648	500	15	2N2221/A	800	30
2N2920	30	60	2N3227	500	20	2N2222/A	800	30
2N2857	40	15	2N3300	500	30	2N5581	800	40
2N2722	40	45	2N3302	500	30	2N5582	800	40
2N2721	40	60	2N3724	500	30	2N697	800	40
2N2481	50	15	2N2480/A	500	40	2N6989	800	50
2N706	50	15	2N1613	500	50			
2N2453	50	30	2N3725	500	50			
2N2903	50	30	2N718/A	500	50			
2N2484	50	60	2N1890	500	60			

PNP

Device Type	I_C (mA)	BV_{CEO}	Device Type	I_C (mA)	BV_{CEO}
2N2604	30	45	2N869/A	200	18
2N2605	30	45	2N3964	200	45
2N930/A	30	45	2N3250/A	200	60
2N706/A	50	15	2N3251/A	200	60
2N5230	50	20	2N3962	200	60
2N4937	50	40	2N3965	200	60
2N4938	50	40	2N3963	200	80
2N4939	50	40	2N4015	300	60
2N3798	50	60	2N4016	300	60
2N3799	50	60	2N1132/A	600	40
2N3806	50	60	2N2904/A	600	40
2N3807	50	60	2N2905/A	600	40
2N3808	50	60	2N4854	600	40
2N3809	50	60	2N4855	600	40
2N3810	50	60	2N2906A	600	60
2N3811	50	60	2N2907/A	600	60
2N2800	80	35	2N3485/A	600	60
2N2944/A	100	10	2N3486/A	600	60
2N2945/A	100	20	2N6987	600	60
2N2946/A	100	35			
2N3494	100	80			
2N3496	100	80			

Notes

- For NPN/PNP dual combinations, consult the factory
- Samples subject to die availability
- This is only a small sampling of the devices available in this packaging

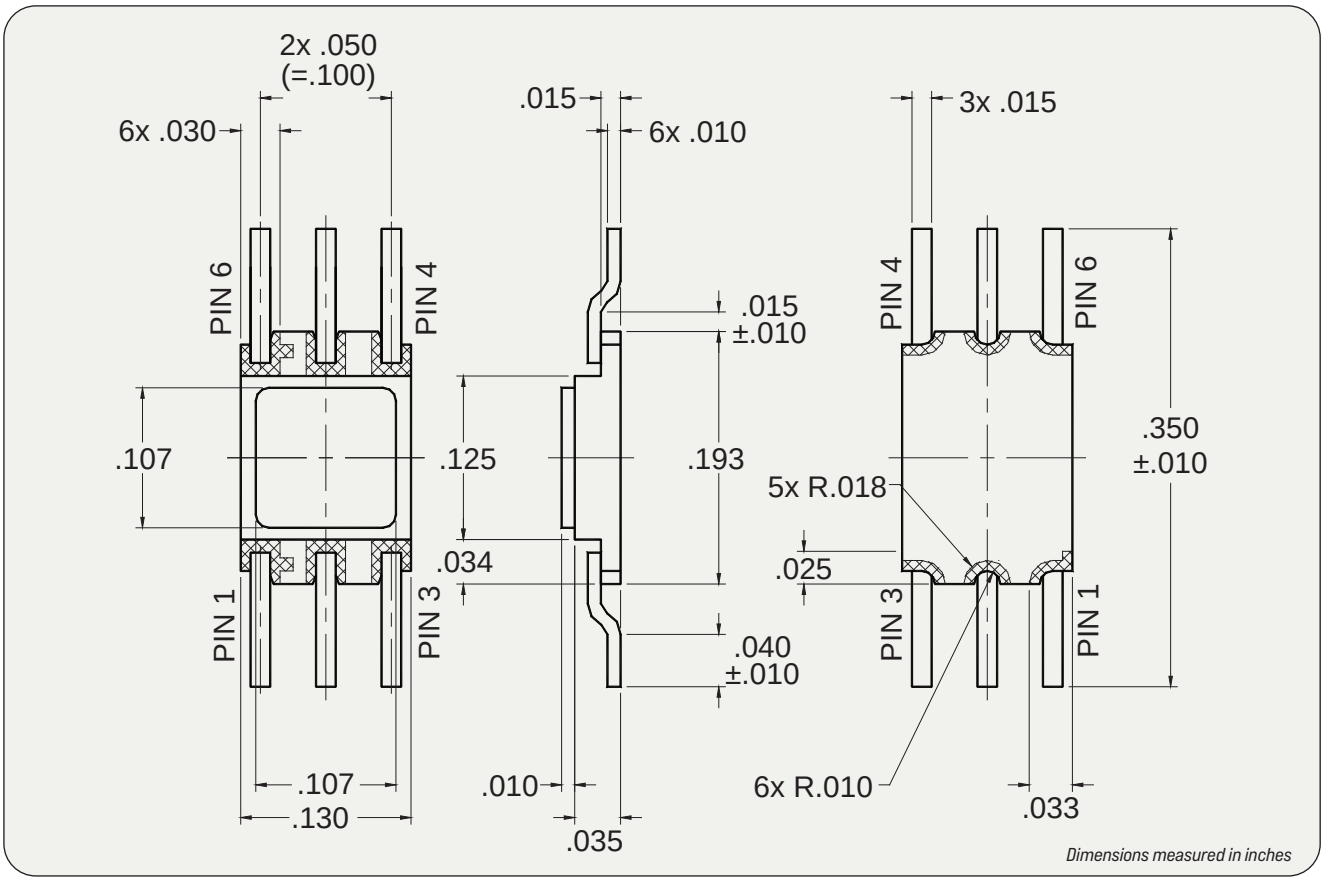

Examples of SSDI Gullwing Products

Part Number	Data Sheet	Description
SDR3595A2GW	RU0002	500 mW, 125 V Ultrafast Recovery Rectifier Replacement for 1N3595
SDR5712A2GW	RC0087	16 V General Purpose Silicon Rectifier
SFF4393A2GW	FT0010	50 mA, 40 V Dual N-Channel JFET Transistor
SFF7002KA2GW	FT0024	300 mA, 60 V, 2 Ω Dual N-Channel Logic Level TrenchFET MOSFET
SFT2222A2GW	TR0030	800 mA, 75 V Dual NPN Transistor Replacement for 2N2222AU; Complementary part to SFT2907A2
SFT22907GW	TR0032	600 mA, 60 V Complementary NPN & PNP Transistor Replacement for 2N2222AU & 2N2907AU
SFT2369A2GW	TR0045	100 mA, 15 V Dual NPN Transistor Replacement for 2N2369AU
SFT2907A2GW	TR0031	600 mA, 60 V Dual PNP Transistor Replacement for 2N2907AU; Complementary part to SFT2222A2
SFT3904A2GW	TR0034	200 mA, 40 V Dual NPN Transistor Replacement for 2N3904AU; Complementary part to SFT3906A2
SFT3906A2GW	TR0038	200 mA, 40 V Dual PNP Transistor Replacement for 2N3906AU; Complementary part to SFT3904A2
SFT390604A2GW	TR0036	400 mA, 60 V NPN / PNP Transistor Replacement for both 2N3906AU (PNP) & 2N3904AU (NPN) in one package
SFT4957A2GW	TR0077	30 mA, 30 V Dual PNP RF Transistor Replacement / enhancement for 2N4957UB; Complementary part to SFT2857A2
SFT85707GW	TR0079	NPN & PNP Pair Small Signal / RF Transistor Replacement for 2N2857 (NPN) and 2N2907 (PNP)

PART NUMBER INDEX

Part Number	Page
2N1209	15
2N1212	15
2N1479	5
2N1480	5
2N1481	5
2N1482	5
2N1483	11
2N1484	11
2N1485	11
2N1486	11
2N1487	20
2N1488	20
2N1489	20
2N1490	20
2N1700	4
2N1701	9
2N1702	20
2N1714	4
2N1716	4
2N1724	15
2N1724A	16
2N1725	16
2N1902	24
2N1904	24
2N1936	30
2N1937	30
2N2102	4
2N2150	8
2N2151	8
2N2657	15
2N2658	16
2N2779	33
2N2780	33
2N2811	23
2N2812	23
2N2813	23
2N2814	23
2N2876	9
2N2877	15
2N2878	15
2N2879	16
2N2880	16
2N2890	8
2N2890	16
2N2891	8
2N2891	16

Part Number	Page
2N2892	16
2N2893	16
2N2983	11
2N2984	11
2N2985	11
2N2986	11
2N2987	4
2N2988	4
2N2989	4
2N2990	4
2N2991	4
2N2992	4
2N2993	4
2N2994	4
2N3017	15
2N3018	23
2N3019	4
2N3021	12
2N3022	12
2N3023	12
2N3024	12
2N3025	12
2N3026	12
2N3055	28
2N3057A	4
2N3163	12
2N3164	12
2N3165	12
2N3166	12
2N3171	12
2N3172	12
2N3173	12
2N3174	12
2N3175	18
2N3176	18
2N3177	18
2N3178	19
2N3183	18
2N3184	18
2N3185	18
2N3186	19
2N3187	18
2N3188	18
2N3189	18
2N3190	19
2N3195	18

Part Number	Page
2N3196	18
2N3197	18
2N3198	19
2N3202	12
2N3203	12
2N3204	12
2N3205	10
2N3206	10
2N3207	10
2N3208	10
2N3245	6
2N3265	31
2N3266	31
2N3418	11
2N3419	11
2N3420	11
2N3421	11
2N3439	4
2N3440	4
2N3445	21
2N3446	21
2N3447	21
2N3448	21
2N3467	6
2N3468	6
2N3469	15
2N3487	21
2N3488	21
2N3489	21
2N3490	21
2N3491	21
2N3492	21
2N3506	11
2N3507	11
2N3583	4
2N3597	30
2N3598	30
2N3599	30
2N3619	9
2N3620	9
2N3621	15
2N3622	15
2N3623	15
2N3627	9
2N3628	15
2N3629	15

Part Number	Page
2N3630	15
2N3634	6
2N3637	6
2N3660	6
2N3661	6
2N3665	4
2N3666	4
2N3675	11
2N3676	11
2N3700	4
2N3719	12
2N3720	12
2N3738	4
2N3739	4
2N3740A	14
2N3741	14
2N3744	15
2N3745	15
2N3746	16
2N3747	15
2N3748	15
2N3749	16
2N3750	15
2N3751	15
2N3752	16
2N3762	7
2N3763	7
2N3766	13
2N3767	13
2N3774	6
2N3775	6
2N3776	6
2N3777	6
2N3778	6
2N3779	6
2N3780	6
2N3781	6
2N3788	8
2N3846	30
2N3847	30
2N3848	30
2N3849	30
2N3850	16
2N3851	16
2N3852	15
2N3853	15

PART NUMBER INDEX

Part Number	Page
2N3867	12
2N3868	12
2N3878	11
2N3878	21
2N3879	21
2N3902	11
2N3917	8
2N3918	8
2N3920	23
2N3928	11
2N3929	11
2N3996	16
2N3997	16
2N3998	16
2N3999	16
2N4000	4
2N4001	4
2N4002	32
2N4003	32
2N4029	6
2N4033	6
2N4070	24
2N4071	24
2N4111	15
2N4112	15
2N4113	16
2N4114	16
2N4116	16
2N4150	23
2N4210	30
2N4211	30
2N4225	11
2N4231	11
2N4231	15
2N4232	11
2N4232A	15
2N4233	11
2N4233	16
2N4233A	16
2N4234	6
2N4235	6
2N4236	6
2N4237	4
2N4238	4
2N4239	4
2N4300	8

Part Number	Page
2N4300	8
2N4301	23
2N4305	16
2N4307	15
2N4309	16
2N4311	15
2N4387	10
2N4388	10
2N4395	15
2N4396	15
2N4398	33
2N4399	33
2N4862	8
2N4863	8
2N4864	8
2N4865	36
2N4866	36
2N4877	13
2N4895	15
2N4896	15
2N4897	16
2N4898	6
2N4899	6
2N4900	6
2N4901	18
2N4902	18
2N4903	18
2N4904	18
2N4905	18
2N4906	18
2N4907	26
2N4908	26
2N4909	26
2N4910	4
2N4910	13
2N4911	4
2N4911	13
2N4912	4
2N4912	13
2N4913	15
2N4914	15
2N4915	16
2N4998	8
2N4999	10
2N5000	8
2N5001	10

Part Number	Page
2N5002	16
2N5003	18
2N5004	16
2N5005	18
2N5006	23
2N5007	26
2N5008	23
2N5009	26
2N5038	30
2N5039	30
2N5048	24
2N5049	23
2N5050	8
2N5051	8
2N5052	8
2N5067	15
2N5068	15
2N5069	16
2N5074	11
2N5075	11
2N5076	11
2N5077	11
2N5083	23
2N5084	23
2N5085	23
2N5091	6
2N5092	5
2N5093	6
2N5094	7
2N5095	5
2N5096	7
2N5097	5
2N5098	5
2N5099	5
2N5147	10
2N5148	8
2N5149	10
2N5150	8
2N5151	10
2N5152	8
2N5153	10
2N5154	8
2N5157	11
2N5202	13
2N5218	24
2N5237	24

Part Number	Page
2N5238	24
2N5239	24
2N5240	17
2N5241	25
2N5250	36
2N5251	36
2N5252	4
2N5264	24
2N5284	17
2N5285	17
2N5286	19
2N5287	19
2N5288	24
2N5289	24
2N5290	26
2N5291	26
2N5294	13
2N5296	13
2N5298	13
2N5301	32
2N5302	32
2N5303	30
2N5312	18
2N5312	26
2N5313	23
2N5313	30
2N5314	26
2N5315	24
2N5315	30
2N5316	26
2N5317	23
2N5318	26
2N5319	24
2N5320	8
2N5321	8
2N5322	10
2N5323	10
2N5326	16
2N5327	23
2N5328	23
2N5329	30
2N5330	32
2N5331	32
2N5333	10
2N5334	11
2N5336	16

PART NUMBER INDEX

Part Number	Page
2N5337	16
2N5338	17
2N5339	17
2N5346	21
2N5347	21
2N5348	21
2N5349	21
2N5384	18
2N5385	18
2N5386	26
2N5386	27
2N5387	21
2N5388	21
2N5389	21
2N5404	18
2N5405	19
2N5406	18
2N5407	19
2N5408	18
2N5409	19
2N5410	18
2N5411	19
2N5412	28
2N5415	6
2N5416	6
2N5427	21
2N5428	21
2N5429	21
2N5430	21
2N5466	11
2N5467	11
2N5468	11
2N5469	11
2N5490	21
2N5492	21
2N5494	21
2N5496	21
2N5539	30
2N5540	25
2N5541	17
2N5542	24
2N5552	23
2N5560	32
2N5584	33
2N5587	35
2N5588	35

Part Number	Page
2N5597	10
2N5598	8
2N5599	10
2N5600	8
2N5601	10
2N5602	8
2N5603	10
2N5604	8
2N5605	18
2N5606	15
2N5607	18
2N5608	16
2N5608	18
2N5609	18
2N5610	16
2N5611	19
2N5612	17
2N5613	18
2N5614	15
2N5615	18
2N5616	16
2N5617	18
2N5618	16
2N5619	19
2N5620	17
2N5621	26
2N5622	23
2N5623	26
2N5624	23
2N5625	26
2N5626	23
2N5627	26
2N5628	24
2N5629	29
2N5630	29
2N5631	29
2N5632	24
2N5633	24
2N5634	24
2N5658	23
2N5659	23
2N5660	8
2N5661	8
2N5662	8
2N5663	8
2N5664	17

Part Number	Page
2N5665	17
2N5666	17
2N5667	17
2N5671	32
2N5672	32
2N5677	19
2N5677	26
2N5678	31
2N5679	6
2N5680	6
2N5681	4
2N5682	4
2N5683	35
2N5684	35
2N5685	34
2N5686	34
2N5729	16
2N5730	23
2N5731	30
2N5732	30
2N5733	32
2N5734	32
2N5737	26
2N5738	26
2N5739	26
2N5740	27
2N5741	31
2N5742	31
2N5743	31
2N5744	31
2N5745	31
2N5758	20
2N5759	20
2N5760	20
2N5781	12
2N5782	12
2N5783	12
2N5784	11
2N5785	11
2N5786	11
2N5804	17
2N5805	17
2N5838	11
2N5839	11
2N5840	11
2N5853	26

Part Number	Page
2N5854	23
2N5867	18
2N5868	18
2N5871	22
2N5872	22
2N5873	21
2N5874	21
2N5875	26
2N5876	26
2N5877	23
2N5879	29
2N5880	29
2N5881	28
2N5882	28
2N5883	32
2N5884	32
2N5885	31
2N5886	31
2N5926	34
2N5931	33
2N5935	32
2N5954	20
2N5955	20
2N5956	20
2N5957	30
2N5958	31
2N5959	30
2N5960	31
2N5966	32
2N5967	33
2N5968	32
2N5969	34
2N5970	28
2N6029	29
2N6030	29
2N6031	29
2N6033	34
2N6040	22
2N6041	22
2N6042	22
2N6043	22
2N6044	22
2N6045	22
2N6046	30
2N6047	30
2N6048	30

PART NUMBER INDEX

Part Number	Page
2N6049	14
2N6060	34
2N6061	35
2N6062	34
2N6063	34
2N6077	21
2N6078	21
2N6079	21
2N6107	22
2N6109	22
2N6111	22
2N6121	13
2N6122	13
2N6124	14
2N6125	14
2N6127	26
2N6128	23
2N6182	26
2N6183	26
2N6184	27
2N6185	27
2N6186	26
2N6187	26
2N6188	27
2N6189	27
2N6190	18
2N6191	18
2N6192	19
2N6193	19
2N6211	10
2N6212	10
2N6213	10
2N6214	10
2N6215	8
2N6215	34
2N6216	24
2N6217	23
2N6226	35
2N6227	20
2N6228	20
2N6229	20
2N6230	27
2N6231	27
2N6232	24
2N6234	17
2N6246	18

Part Number	Page
2N6246	29
2N6247	29
2N6248	27
2N6248	29
2N6249	24
2N6250	24
2N6251	25
2N6270	23
2N6271	32
2N6272	32
2N6274	34
2N6275	34
2N6276	34
2N6277	34
2N6278	34
2N6279	34
2N6280	34
2N6281	34
2N6288	21
2N6290	21
2N6292	21
2N6303	12
2N6306	22
2N6308	22
2N6317E3	22
2N6318E3	22
2N6322	33
2N6323	33
2N6324	33
2N6325	33
2N6326	32
2N6327	32
2N6328	32
2N6329	33
2N6330	33
2N6331	33
2N6338	31
2N6339	31
2N6339	32
2N6340	31
2N6340	33
2N6341	31
2N6350	16
2N6351	17
2N6352	16
2N6353	17

Part Number	Page
2N6354	24
2N6372	20
2N6373	20
2N6374	20
2N6377	35
2N6378	35
2N6379	35
2N6380	35
2N6381	35
2N6382	35
2N6386	22
2N6387	23
2N6388	23
2N6420	6
2N6421	10
2N6422	10
2N6423	10
2N6424	6
2N6425	6
2N6436	32
2N6437	32
2N6438	32
2N6465	13
2N6466	13
2N6467	14
2N6468	14
2N6469	29
2N6470	28
2N6471	28
2N6472	28
2N6474	13
2N6476	14
2N6486	28
2N6487	28
2N6488	28
2N6489	29
2N6490	29
2N6491	29
2N6495	23
2N6496	28
2N6500	14
2N6510	21
2N6511	21
2N6512	21
2N6513	21
2N6514	21

Part Number	Page
2N6542	17
2N6543	17
2N6544	22
2N6546	28
2N6547	28
2N6560	25
2N6561	25
2N6562	25
2N6563	25
2N6569	27
2N6579	27
2N6580	25
2N6581	25
2N6582	25
2N6583	25
2N6588	25
2N6590	25
2N6594	27
2N6609	29
2N6666	22
2N6667	26
2N6668	26
2N6671	22
2N6673	22
2N6674	28
2N6675	28
2N6676	28
2N6677	28
2N6678	28
2N6686	31
2N6687	31
2N6688	30
2N6689	28
2N6690	28
2N6691	28
2N6693	28
2N6836	28
2N6837	30
2N7142	27
2N7143	27
2N7368	23
2N7369	26
2N7375	17
2N7376	17
2N7377	17
2SPT6341SD	31

PART NUMBER INDEX

Part Number	Page
SFT10000/3	30
SFT10015/3	34
SFT1192	10
SFT1192/59	10
SFT1192S.5	10
SFT2010	36
SFT2012	36
SFT2014	36
SFT3019	4
SFT3303/111	19
SFT3303G	19
SFT3303J	19
SFT3403/111	19
SFT3403G	19
SFT3403J	19
SFT3439S.22	4
SFT3852/59	15
SFT3852/59	15
SFT4100/3	28
SFT4100M	28
SFT4100S1	28
SFT4300	8
SFT4300A	8
SFT4300S.22	8
SFT4373S.22	5
SFT4374	7
SFT4399/3	33
SFT4407S.22	10
SFT5001/59	18
SFT5001/66	19
SFT5001J	19
SFT5001S.5	19
SFT5002/59	24
SFT5002J	24
SFT5002M	24
SFT5004/59	24
SFT5004J	24
SFT5004M	24
SFT501	19
SFT501/G	19
SFT501J	19
SFT501JC	19
SFT502	17
SFT502/G	17
SFT503	19
SFT503/G	19

Part Number	Page
SFT503J	19
SFT503JC	19
SFT504	17
SFT504/G	17
SFT5094/5	6
SFT5094-4	6
SFT5094G	6
SFT5094S.22	6
SFT5094S.5	6
SFT5095	5
SFT5096/5	6
SFT5096-4	7
SFT5096A/5	7
SFT5096A-4	7
SFT5096AG	7
SFT5096AS.22	7
SFT5096AS.5	7
SFT5096G	7
SFT5096S.22	7
SFT5096S.5	7
SFT5097	5
SFT5151/5	26
SFT5151G	26
SFT5151J	26
SFT5151S.5	26
SFT5152/5	23
SFT5152G	23
SFT5152J	23
SFT5152S.5	23
SFT5153/5	26
SFT5153G	26
SFT5153J	26
SFT5153S.5	26
SFT5154/5	23
SFT5154G	23
SFT5154J	24
SFT5154S.5	24
SFT5333	10
SFT5333A	10
SFT5333S.22	10
SFT5553AG	19
SFT5553AJ	19
SFT5666/39	17
SFT5671/3	32
SFT5671M	32
SFT5671S1	32

Part Number	Page
SFT5672/3	32
SFT5672E/3	34
SFT5672EM	34
SFT5672ES1	34
SFT5672M	32
SFT5672S1	32
SFT5926/63	36
SFT6032/3	34
SFT6033/3	34
SFT6036/5	14
SFT6036J	14
SFT6036M	14
SFT6036S.3	14
SFT6036S.5	14
SFT6039/5	13
SFT6039J	13
SFT6039M	13
SFT6039S.3	13
SFT6039S.5	13
SFT6284N	34
SFT6284P	34
SFT6287N	35
SFT6287P	35
SFT6338/3	31
SFT6338M	31
SFT6338Z	31
SFT6339/3	31
SFT6339M	31
SFT6339Z	31
SFT6340/3	31
SFT6340M	31
SFT6340Z	31
SFT6341/3	31
SFT6341M	31
SFT6341Z	31
SFT6650/3	26
SFT6678/3	28
SFT6678M	28
SFT6678Z	28
SFT6800	8
SFT6800/59	8
SFT6800S.5	8
SFT698	5
SFT8600/4	5
SFT8600/5	5
SFT8600G	5

Part Number	Page
SFT8600S.22	5
SFT8600S.5	5
SFTN5096	7
SFX1192	10
SFX5096/5	7
SPT35P3	13
SPT5006/3	24
SPT5006/61	24
SPT5006M	24
SPT5006S1	24
SPT5008/3	24
SPT5008/61	24
SPT5008M	24
SPT5008S1	24
SPT5502	4
SPT5503	5
SPT6060/3	30
SPT6233/66	17
SPT6233J	17
SPT6233M	17
SPT6234/66	17
SPT6234J	17
SPT6234M	17
SPT6235/66	17
SPT6235J	17
SPT6235M	17
SPT6693	28
STX6905	7
STX7905	5

CASE OUTLINES

Case Outline Index

- Cerpack 45
- LCC4 45
- SMD.22 45
- SMD.5 46
- SMD1 46
- TO-3 46
- TO-5 46
- TO-8 47
- TO-18 47
- TO-33 47
- TO-39 47
- TO-46 48
- TO-59 (2 pins) 48
- TO-59 (3 pins) 48
- TO-60 48
- TO-61 49
- TO-63 49
- TO-66 49
- TO-111 49
- TO-114 50
- TO-254 50
- TO-254Z 50
- TO-257 50

Cerpack

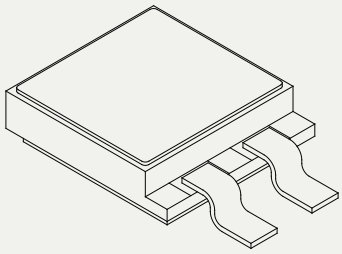

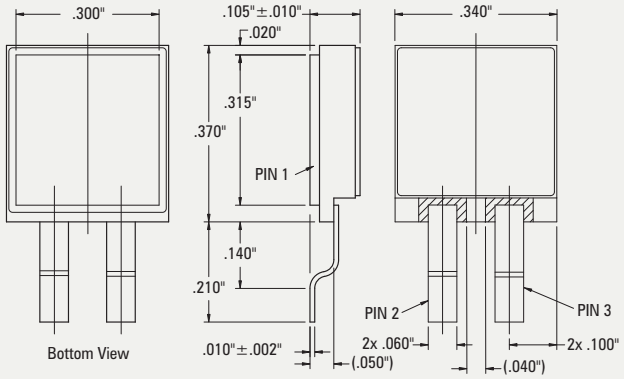

LCC4

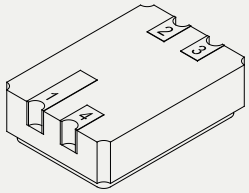

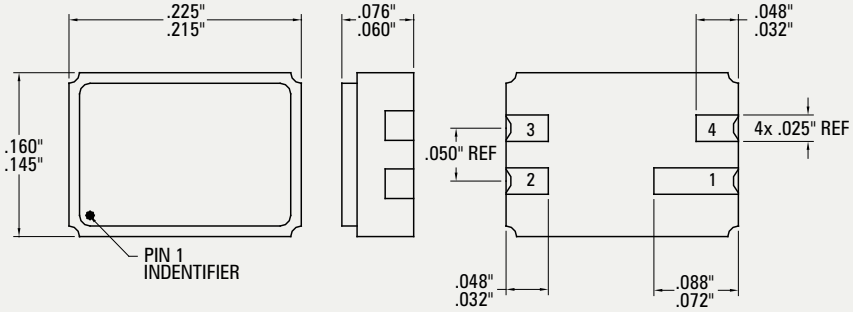

SMD.22

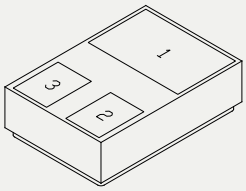

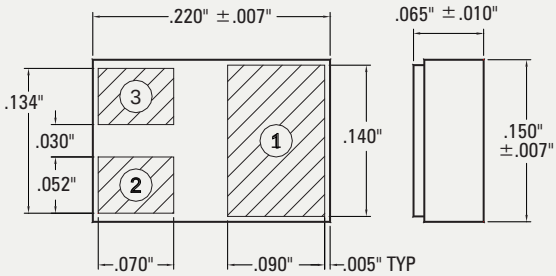

Tolerance (Unless otherwise specified): XXX ± .005”
XX ± .010”

For reference only, please refer to SSDI data sheets at www.ssdi-power.com for more information.

SMD.5

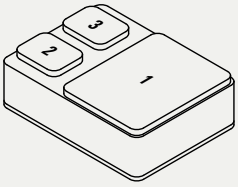

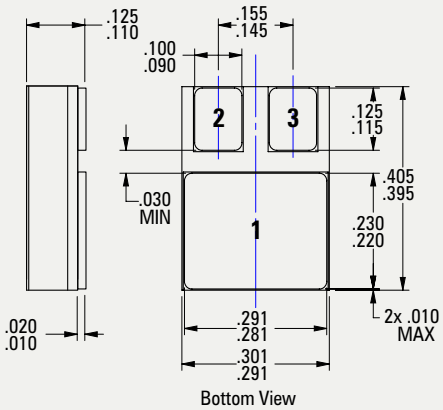

SMD1

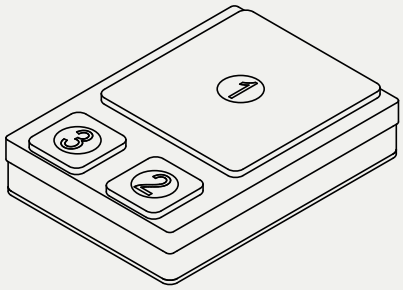

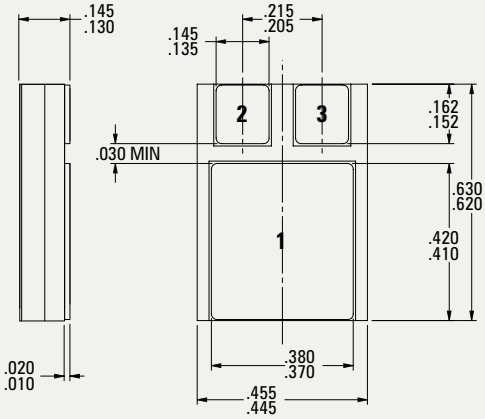

TO-3

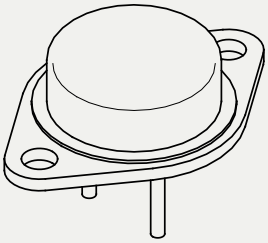

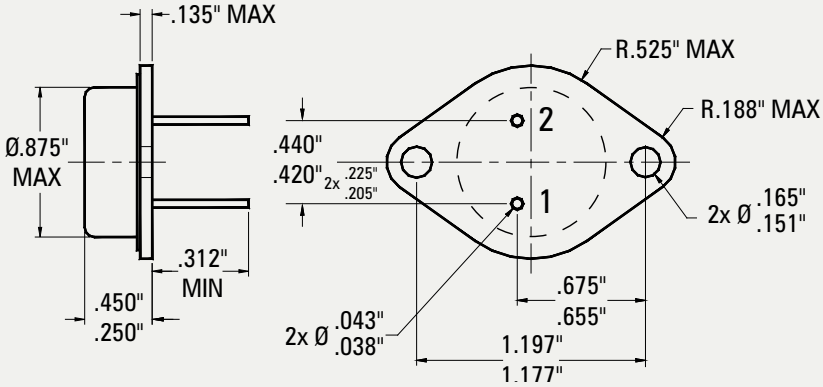

TO-5

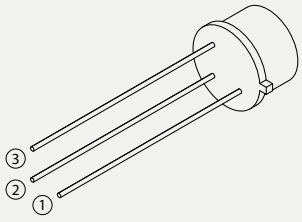

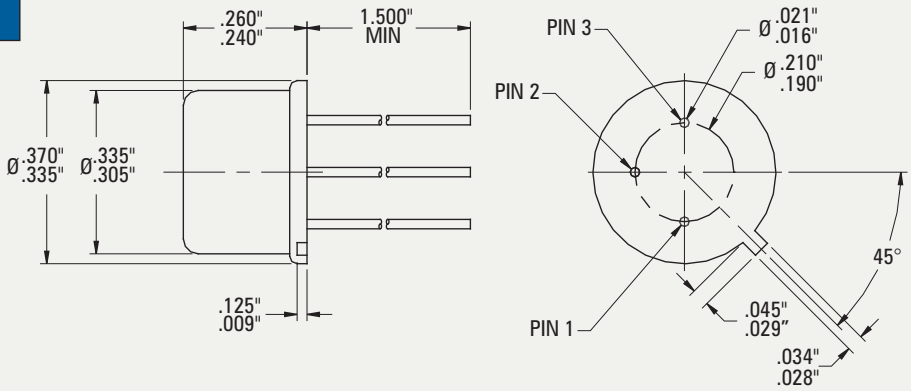

Tolerance (Unless otherwise specified): XXX ± .005"
XX ± .010"

For reference only, please refer to SSDI data sheets at www.ssdi-power.com for more information.

CASE OUTLINES

TO-8

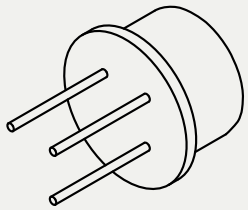

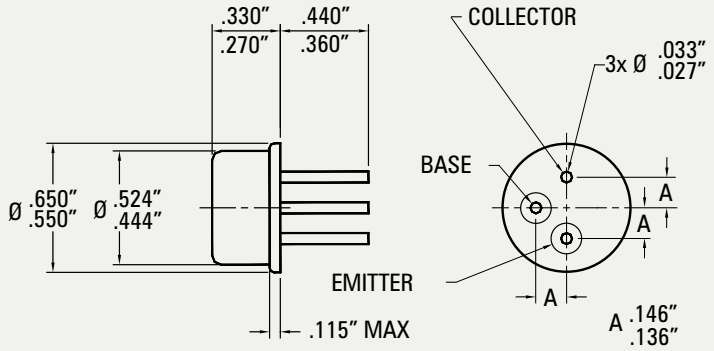

TO-18

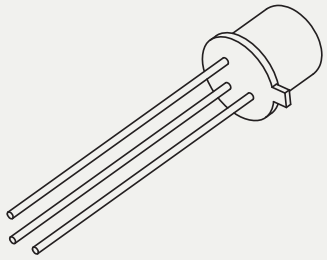

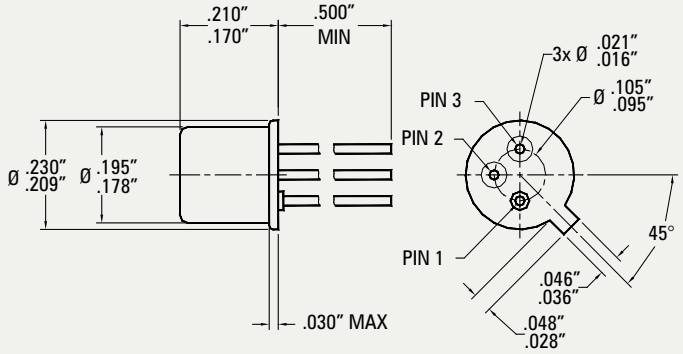

TO-33

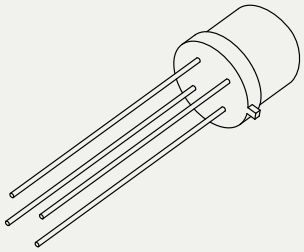

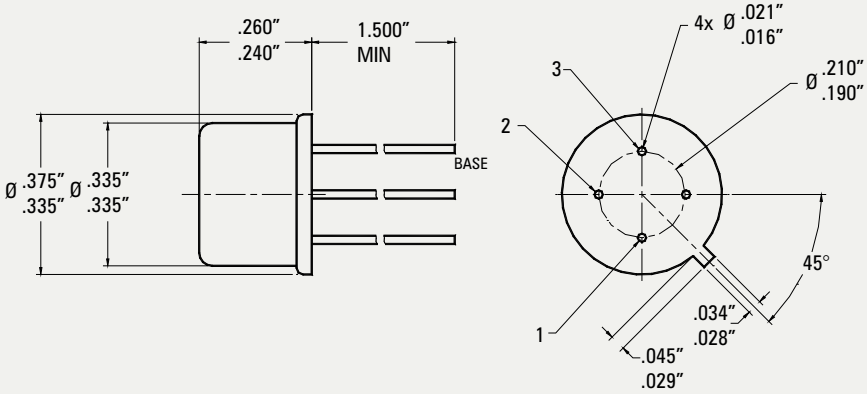

TO-39

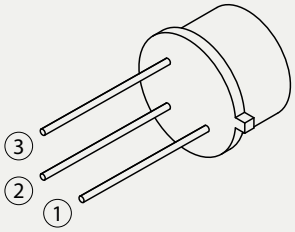

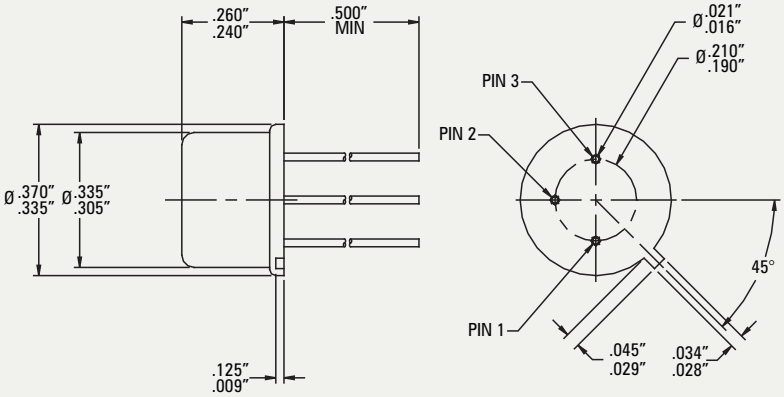

Tolerance (Unless otherwise specified): XXX ± .005″
XX ± .010″

For reference only, please refer to SSDI data sheets at www.ssdi-power.com for more information.

TO-46

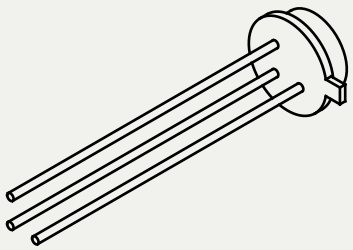

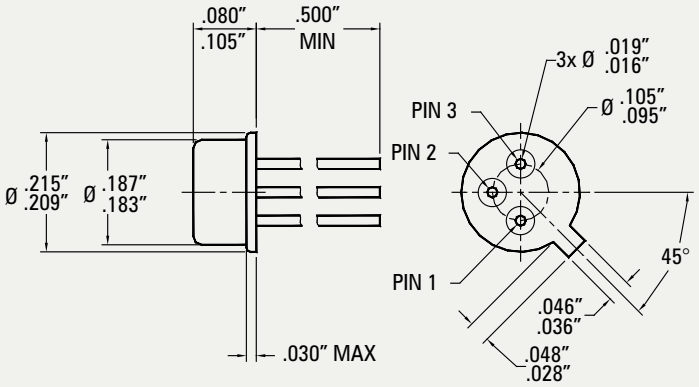

TO-59 (2 Pins)

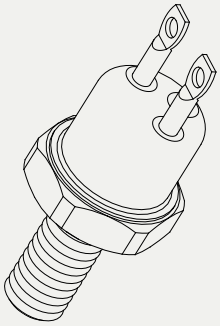

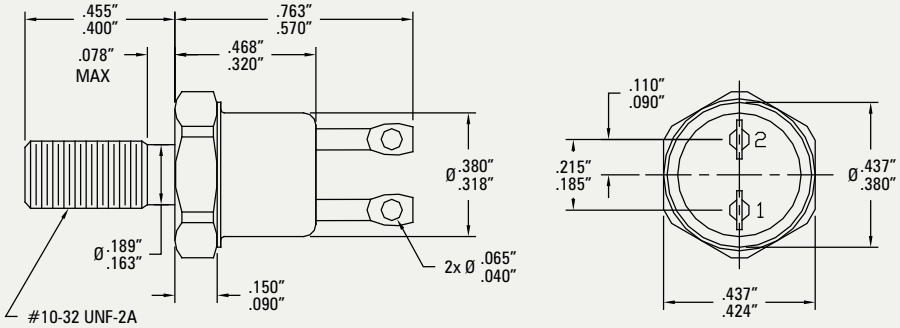

TO-59 (3 Pins)

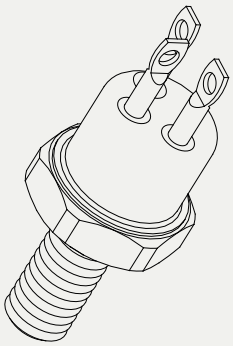

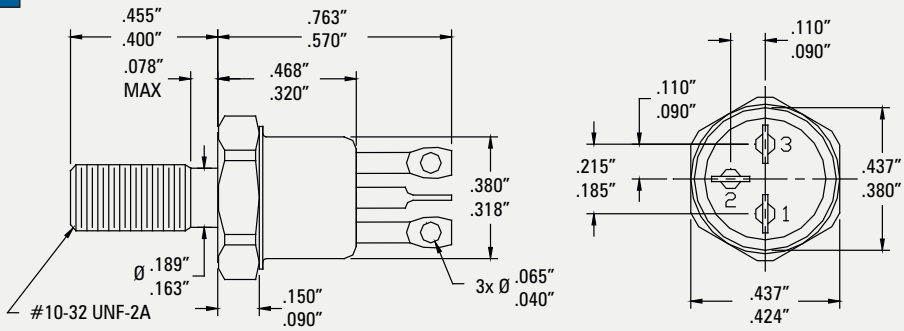

TO-60

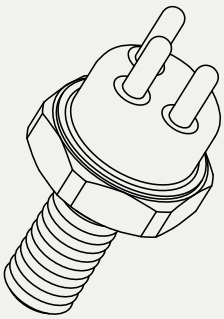

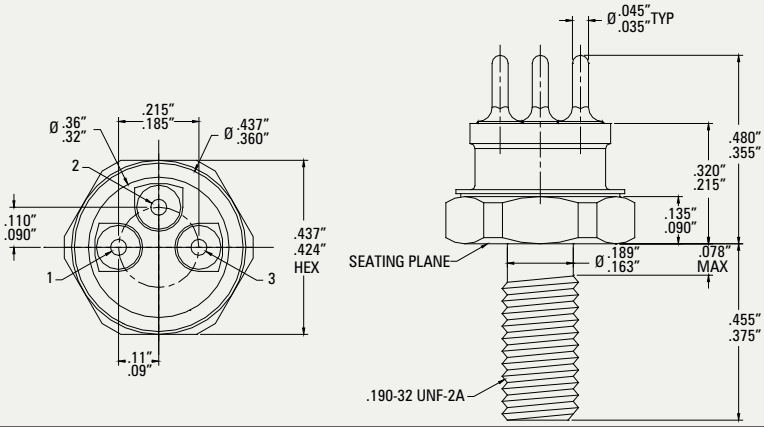

Tolerance (Unless otherwise specified): XXX ± .005"
XX ± .010"

For reference only, please refer to SSDI data sheets at www.ssdi-power.com for more information.

CASE OUTLINES

TO-61

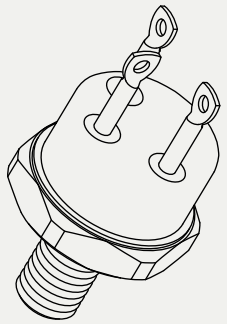

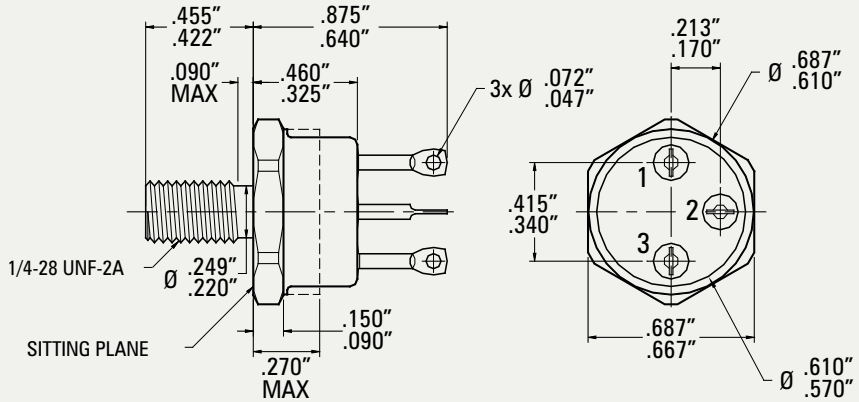

TO-63

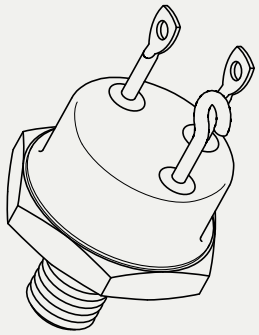

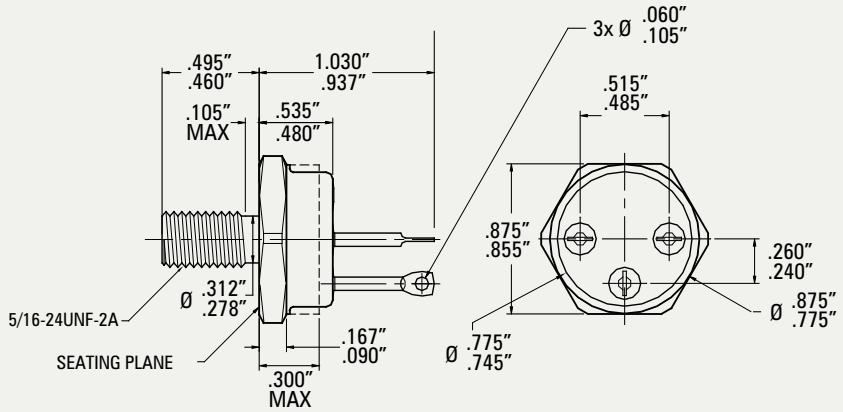

TO-66

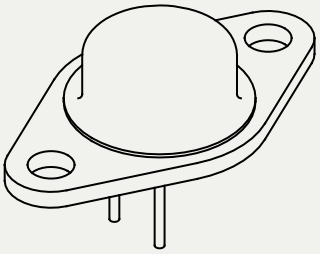

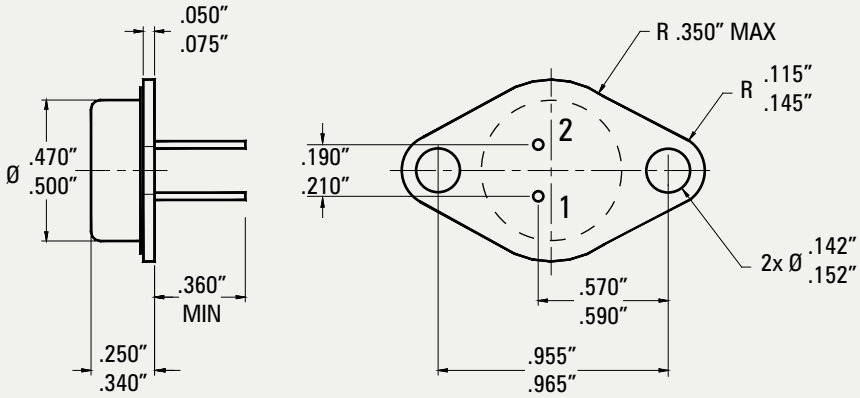

TO-111

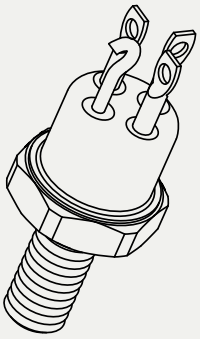

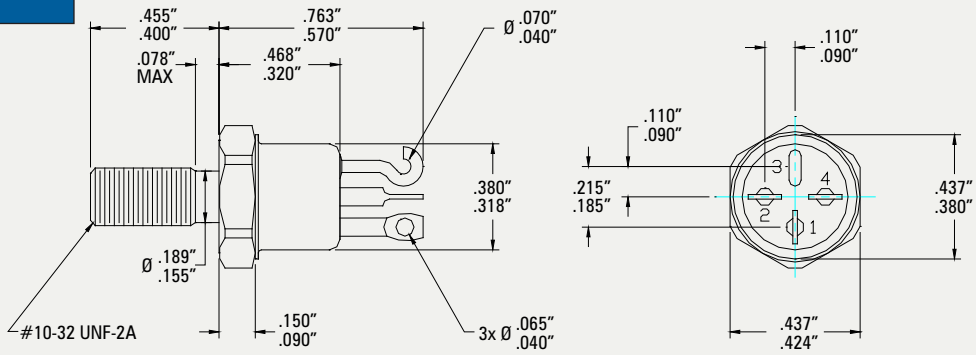

Tolerance (Unless otherwise specified): XXX ± .005″
XX ± .010″

For reference only, please refer to SSDI data sheets at www.ssdi-power.com for more information.

CASE OUTLINES

TO-114

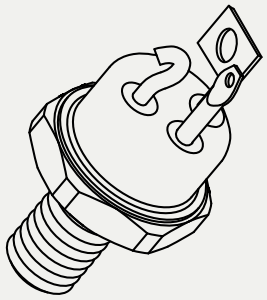

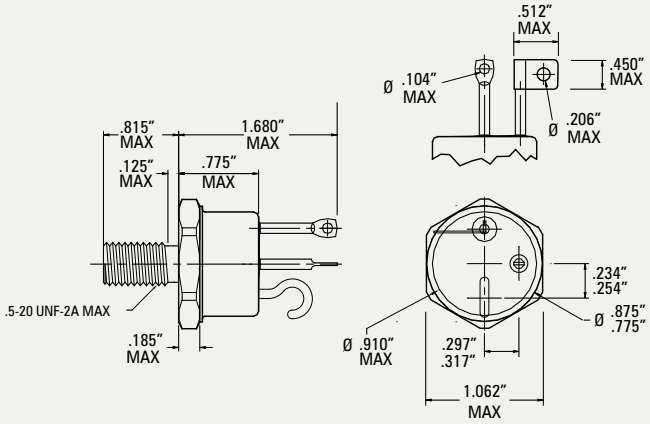

TO-254

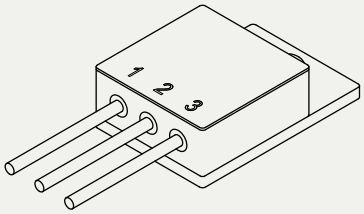

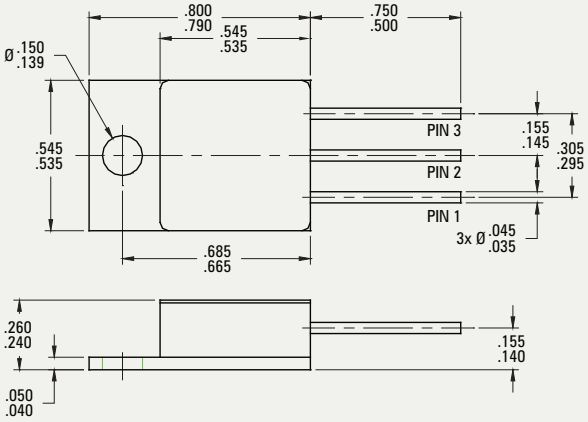

TO-254Z

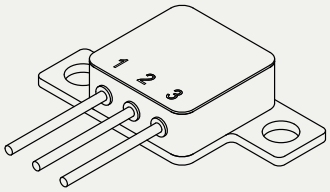

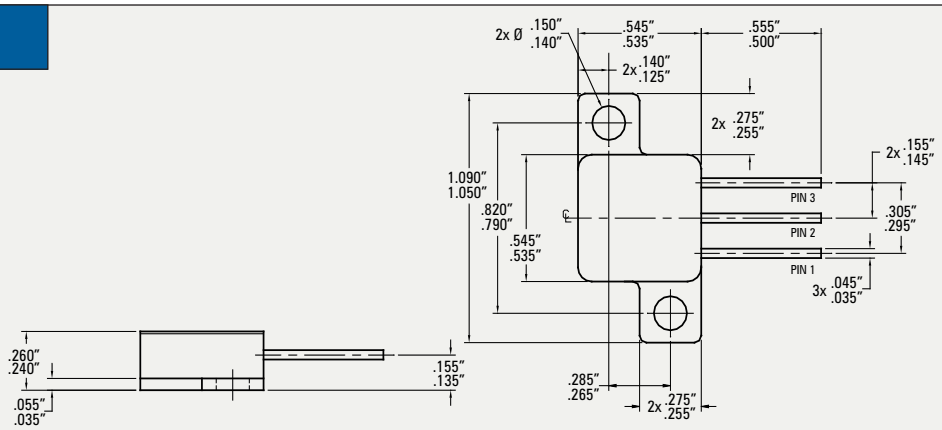

TO-257

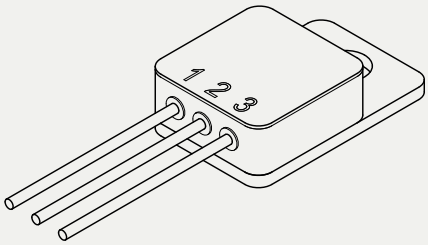

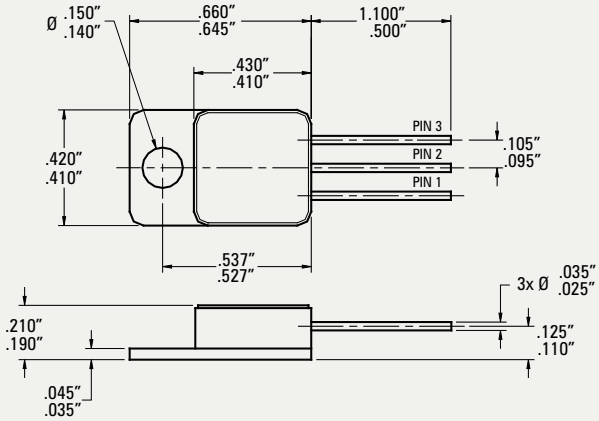

Tolerance (Unless otherwise specified): XXX ± .005"
XX ± .010"

For reference only, please refer to SSDI data sheets at www.ssdi-power.com for more information.

Solid State Devices Screening Per MIL-PRF-19500 Guidelines*

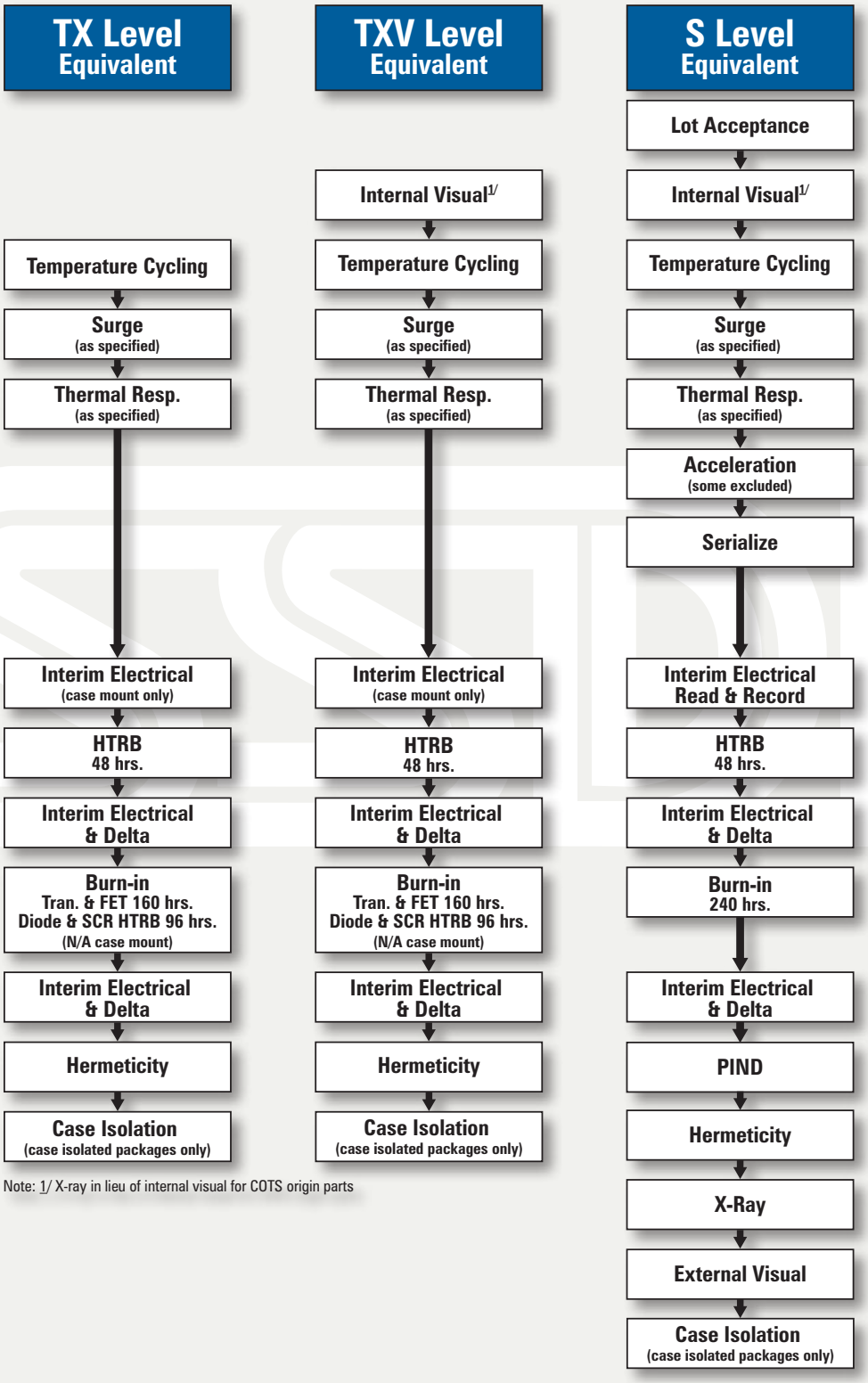

Note: 1/ X-ray in lieu of internal visual for COTS origin parts

*Specific Product Types May Have Alternate Screening Flows

Contact your local SSDI Representative or contact the factory directly at (562) 404-4474.
Email: ssdi@ssdi-power.com

SSDI'S VITAL ROLE IN SUPPLYING HIREL PRODUCTS

SEMICONDUCTOR MARKET OVERVIEW

While SSDI has the capabilities to supply most **standard, generic products** (represented by the orange section below), its sales primarily address the need for **End of Life / DMS Solutions** or **New, Innovative Solutions**, which are not readily available through high volume manufacturers or distribution channels (represented by the 2 blue sections below).

SEMICONDUCTOR MARKET TREND

Due to market changes (i.e. mergers, acquisitions, etc.), there is an increasing trend of planned obsolescence or product discontinuation due to insufficient demand across the entire customer base. As inventory of standard, generic products shrinks, SSDI is able to fill these gaps and even fulfill small- to medium-sized orders. SSDI's flexibility also allows it to offer application specific solutions. With this investment in the specific needs of each program, SSDI benefits by supporting the full life span of the program while alleviating potential supply concerns for the customer.

When demand diminishes, competitors often discontinue products

HOW SSDI RESCUES PROGRAMS FROM:

RELIABILITY ISSUES

- **Offer up to JANS level / equivalent S level screening**
- **2 JANS certified facilities in the USA**
- **50+ years supporting aerospace & defense applications**
- **In-house screening capabilities** (additional screening options to match mission specs)

SUPPLY ISSUES

- **Offer replacements for most products from competitors** (e.g. Microsemi, Infineon / IR, TI, Siliconix, etc.)
- **Maintain materials inventory** (work with customer to forecast future orders)
- **Shorter lead times** (TX, TXV, and S level equivalent screening - offering faster delivery than out of stock QPL devices awaiting approval)
- **Work with customer to accommodate small orders**

PERFORMANCE ISSUES

- **Design flexibility** (target key electrical characteristics to match mission specs)
- **Packaging flexibility** (improve density of board design which leads to overall system cost improvements)
- **Build to data sheets & SCDs**
- **Product development** (offer higher performance than standard, generic products)

Domestic Sales Representatives

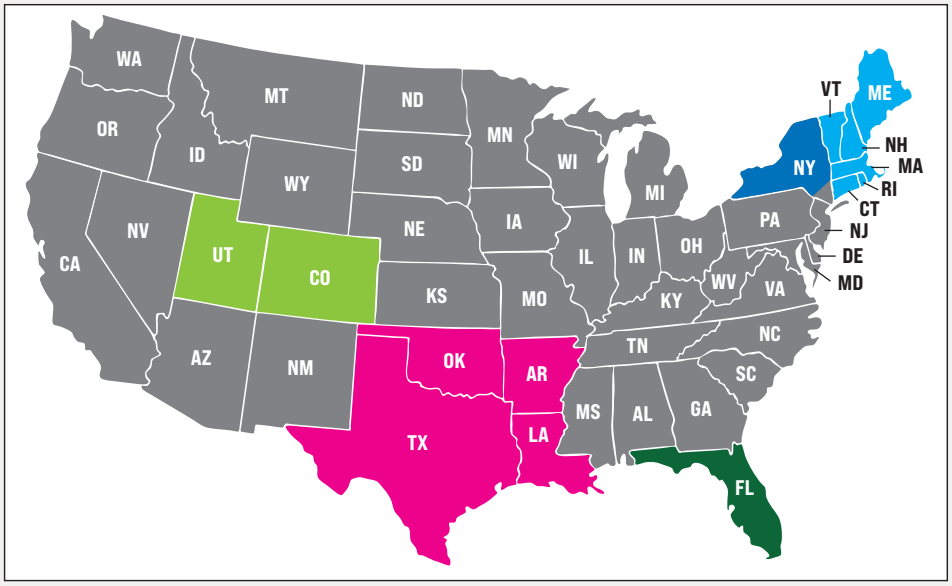

Micro Technology Group
(CT, ME, MA, NH, RI, VT)
450 Chauncy St., Ste. 3
Mansfield, MA 02048
Phone: 508-337-3388
Website: www.mtgelectronics.com
sales@mtgelectronics.com

Zimmerman Sales *(Upstate NY)*
111 Marsh Rd. Office Bldg.
Pittsford, NY 14534
Phone: 585-381-3186
Website: www.zimmermansales.com
sales@zimmermansales.com

FLA. Technology Sales, Inc. *(FL)*
Phone: 407-421-2366
eFax: 734-939-4411
Email: terry@flatechnology.com

Thom Luke Sales *(CO, UT)*
6860 S. Yosemite Ct., #2000
Centennial, CO 80112
Phone: 602-904-3756
Website: www.thomlukesales.com
colorado@thomlukesales.com

CentraMark Technical Sales Associates
(TX, OK, AR, LA)
1705 Analog Dr.
Richardson, TX 75081-1944
Phone: 972-414-8188
Website: cmatex.com

SSDI Direct
Phone: 562-404-4474
Website: ssdi-power.com

International Sales Representatives

Johnson Group Services (JGS)
(United Kingdom, Ireland)
The Ryder Cloisters, 36, Evelyn Rd.
Dunstable, Bedfordshire LU5 4NG
United Kingdom
Phone: +44 (0) 1582 603439
dvjohnson@ssdi-power.co.uk

Manz Electronic
(Germany / Austria)
Schäuberstrasse 22, D-74354 Besigheim
Germany
Phone: +49 (0)7143 4055905
rainer.manz@manz-electronic.de
rainer.manz@manz-electronic-highrel-group.space

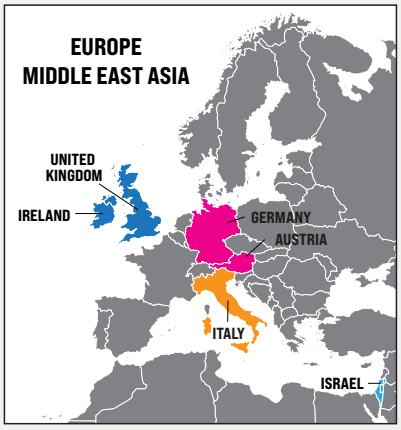

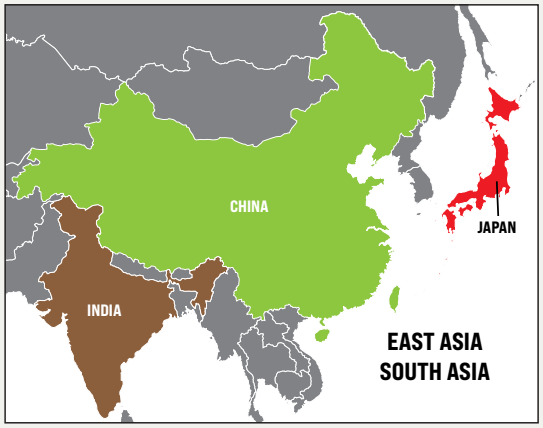

Milano Brothers *(Italy)*
Via Enrico Fermi 79, 00146 Roma, Italy
Phone: +39.338.49.69.298
lauta@milanobro.com
USA Office: 380 SW 12th Ave.
Deerfield Beach, FL 33442
Phone: 954-420-5000

FMS Aerospace Ltd. *(Israel)*
3 HaBarzel Street
Tel-Aviv 6971005, Israel
Phone: 972-3-6094977
tal@fmsaerospace.com

Rironic Electronic Tech. Co., Ltd *(China)*
9th Floor, D Block, He Sheng Jing Guang Ctr.
No. 11, Tang Yan Road, Yan Ta District
XI'AN City, Shaan'Xi Province, China
Phone: +86-029-88377000
Website: www.rironic.com
steven_zhang@rironic.com

Irys Electronics Engineering Services Pvt Ltd. *(India)*
26½ Plot 4 & 5, Silver Oak Park
Baner Rd, Pune 411045, Maharashtra, India
Phone: 91 20 2729 1836
irys.india@iryselectronics.com

Sojitz Aerospace *(Japan)*
Marunouchi Trust Tower Main
4th Floor, 8-3 Marunouchi 1-chome,
Chiyoda-Ku, Tokyo, Japan 100-0005
Phone: +81-(0)3-6870-7221
goto-kotaro@sojitz-aero.com

SSDI Direct
Phone: 562-404-4474
Website: ssdi-power.com